Independent Statistics & Analysis
U.S. Energy Information Administration

Distributed Generation, Battery Storage, and Combined Heat and Power System Characteristics and Costs in the Buildings and Industrial Sectors

May 2020

Independent Statistics & Analysis
www.eia.gov

U.S. Department of Energy
Washington, DC 20585

This report was prepared for the U.S. Energy Information Administration (EIA), the statistical and analytical agency within the U.S. Department of Energy. By law, EIA's data, analyses, and forecasts are independent of approval by any other officer or employee of the United States Government. The views in this report therefore should not be construed as representing those of the U.S. Department of Energy or other federal agencies.

Distributed Generation, Battery Storage, and Combined Heat and Power System Characteristics and Costs in the Buildings and Industrial Sectors

Distributed generation in the residential and commercial buildings sectors refers to onsite, behind-the-meter generation of energy. This often includes electricity from renewable energy systems such as solar photovoltaics (PV) and small wind turbines, but it can also include electricity and captured waste heat from combined heat and power (CHP) systems. Many factors influence the market for distributed generation, including government policies at the local, state, and federal levels, and project costs, which vary significantly depending on location, size, and application.

Current and future equipment costs of distributed generation are subject to uncertainty. As part of its *Annual Energy Outlook* (AEO), the U.S. Energy Information Administration (EIA) updates projections to reflect the most current, publicly available historical cost data and uses multiple third-party estimates of future costs in the near and long terms. Performance data are likewise based on currently available technology and expert projections of future technologies.

Before the AEO2020 reporting cycle, EIA contracted with an external consultant to develop cost and performance characterizations of PV, small wind, and CHP installations in the buildings and industrial sectors.[1] The consultant provided cost and performance data for systems of various sizes at various intervals for 2012–2050. Two levels of future technology optimism were offered: a Reference case and an Advanced case that included lower equipment costs, improved performance, or both.

From this information, EIA used national-level average annual costs for a typical system size in each sector. Abbreviated tables of these system sizes and costs are presented in the residential and commercial chapters of the Assumptions to the AEO. Additional information in the contracted report—including equipment degradation rate, system life, annual maintenance cost, inverter cost, and conversion efficiency—was adapted for input in the Distributed Generation Submodules of the Residential and Commercial Demand modules of the National Energy Modeling System.

As described in the assumptions reports, other information not included in the report—such as resource availability, avoided electricity cost, interconnection limitations, incentive amounts, installed capacity-based cost reductions, and other factors—ultimately affect the capacity of distributed generation and CHP added within a given sector and year.

The report, *Analyze Distributed Generation, Battery Storage, and Combined Heat and Power Technology Data and Develop Performance and Cost Estimates and Analytic Assumptions for the National Energy Modeling System: Final Report*, is available in Appendix A. When referencing the report, cite it as a report by Leidos, Inc., prepared for the U.S. Energy Information Administration.

[1] Distributed generation systems often cost more per unit of capacity than utility-scale systems. A separate analysis involves assumptions for electric power generation plant costs for various technologies, including utility-scale photovoltaics and both onshore and offshore wind turbines used in the Electricity Market Module.

APPENDIX A

EOP IV Contract #DE-EI0002956
Task Order #89303019FEI400025
Subtask 5.1
Analyze Distributed Generation, Battery Storage, and Combined Heat and Power Technology Data and Develop Performance and Cost Estimates and Analytic Assumptions for the National Energy Modeling System: Final Report

U.S. Energy Information Administration
Office of Energy Analysis
Office of Energy Consumption and Efficiency Analysis

April 28, 2020

leidos

EOP IV Contract DE-EI0002956
Task Order #89303019FEI400025
Subtask 5.1
Analyze Distributed Generation, Battery Storage and Combined Heat and Power Technology Data and Develop Performance and Cost Estimates and Analytic Assumptions for National Energy Modeling System: Final Report

U.S. Energy Information Administration
Office of Energy Analysis
Office of Energy Consumption and Efficiency Analysis

April 28, 2020

leidos

This report has been prepared for the use of the client for the specific purposes identified in the report. The conclusions, observations and recommendations contained herein attributed to Leidos constitute the opinions of Leidos. To the extent that statements, information and opinions provided by the client or others have been used in the preparation of this report, Leidos has relied upon the same to be accurate, and for which no assurances are intended and no representations or warranties are made. Leidos makes no certification and gives no assurances except as explicitly set forth in this report.

© 2020 Leidos, Inc.
All rights reserved.

Review of Distributed Generation and Combined Heat and Power Technology

U.S. Energy Information Administration

Table of Contents

Table of Contents
List of Tables
List of Figures

Section 1 INTRODUCTION 1-1
1.1 Technologies Assessed 1-3

Section 2 GENERAL BASIS FOR TECHNOLOGY EVALUATION 2-1
2.1 Leidos Background 2-1
2.2 Base Fuel Characteristics 2-1
2.3 Base Technology Descriptions 2-2
2.3.1 Photovoltaic 2-2
2.3.2 Wind 2-8
2.3.3 Fuel Cell 2-10
2.3.4 Reciprocating Engine 2-16
2.3.5 Natural Gas Microturbine 2-19
2.3.6 Natural Gas Turbine 2-20
2.3.7 Combined Cycle 2-22
2.3.8 Battery Energy Storage Systems (BESS) 2-22
2.4 Cost Estimation Methodology 2-24
2.4.1 Capital Cost 2-24
2.4.2 Operation and Maintenance Costs 2-25
2.4.3 Regional Cost Factors 2-27
2.4.4 Technologies Performance Specifications 2-27

Section 3 RESIDENTIAL 3-1
3.1 Residential – Small Solar Photovoltaic (RSS) 3-1
3.1.1 Equipment and Systems 3-1
3.1.2 Technology Specifications 3-1
3.1.3 Capital Cost Estimate 3-2
3.1.4 O&M Estimate 3-3
3.1.5 Reference Technologies Projections 3-3
3.1.6 Advanced Technologies Projection 3-5
3.2 Residential – Wind System (RWS) 3-6
3.2.1 Equipment and Systems 3-6
3.2.2 Technology Specifications 3-6
3.2.3 Capital Cost Estimate 3-7

3.2.4 O&M Cost Estimate 3-8
3.2.5 Reference Technologies Projections..... 3-9
3.2.6 Advanced Technologies Projections..... 3-10
3.3 Residential – Fuel Cell System (RFC)..... 3-11
3.3.1 Equipment and Systems..... 3-11
3.3.2 Technology Specifications..... 3-11
3.3.3 Capital Cost Estimate 3-12
3.3.4 O&M Estimate..... 3-12
3.3.5 Reference Technologies Projections..... 3-13
3.3.6 Advanced Technologies Projections..... 3-14
3.4 Residential – Battery Energy Storage (RBESS)..... 3-16
3.4.1 Equipment and Systems..... 3-16
3.4.2 Technology Specifications..... 3-16
3.4.3 Capital Cost Estimate 3-17
3.4.4 O&M Cost Estimate 3-17
3.4.5 Reference Technologies Projections..... 3-18
3.4.6 Advanced Technologies Projections..... 3-19

Section 4 COMMERCIAL 4-1
4.1 Commercial – Small Solar Photovoltaic System (CSS)..... 4-1
4.1.1 Equipment and Systems..... 4-1
4.1.2 Technology Specifications..... 4-1
4.1.3 Capital Cost Estimate 4-2
4.1.4 O&M Cost Estimate 4-3
4.1.5 Reference Technologies Projections..... 4-3
4.1.6 Advanced Technologies Projections..... 4-5
4.2 Commercial – Large Solar Photovoltaic System (CLS)..... 4-6
4.2.1 Equipment and Systems..... 4-6
4.2.2 Technology Specifications..... 4-6
4.2.3 Capital Cost Estimate 4-7
4.2.4 O&M Cost Estimate 4-7
4.2.5 Reference Technologies Projections..... 4-8
4.2.6 Advanced Technologies Projections..... 4-9
4.3 Commercial – Wind System (CWS)..... 4-10
4.3.1 Equipment and Systems..... 4-10
4.3.2 Technology Specifications..... 4-10
4.3.3 Capital Cost Estimate 4-11
4.3.4 O&M Cost Estimate 4-12
4.3.5 Reference Technologies Projections..... 4-13
4.3.6 Advanced Technologies Projections..... 4-14
4.4 Commercial Fuel Cell (CFC)..... 4-15
4.4.1 Equipment and Systems..... 4-15
4.4.2 Technology Specifications..... 4-16
4.4.3 Capital Cost Estimate 4-17
4.4.4 O&M Cost Estimate 4-18
4.4.5 Reference Technologies Projections..... 4-19
4.4.6 Advanced Technologies Projections..... 4-19

4.5 Commercial – Natural Gas Reciprocating Engine (CNE) 4-22
4.5.1 Equipment and Systems 4-22
4.5.2 Technology Specifications 4-22
4.5.3 Capital Cost Estimate 4-22
4.5.4 O&M Cost Estimate 4-23
4.5.5 Reference Technologies Projections 4-24
4.5.6 Advanced Technologies Projections 4-25
4.6 Commercial – Oil Reciprocating Engine (COE) 4-26
4.6.1 Equipment and Systems 4-26
4.6.2 Technology Specifications 4-27
4.6.3 Capital Cost Estimate 4-27
4.6.4 O&M Cost Estimate 4-28
4.6.5 Reference Technologies Projections 4-29
4.6.6 Advanced Technologies Projections 4-30
4.7 Commercial – Natural Gas Turbine (CNT) 4-30
4.7.1 Equipment and Systems 4-30
4.7.2 Technology Specifications 4-31
4.7.3 Capital Cost Estimate 4-31
4.7.4 O&M Cost Estimate 4-32
4.7.5 Reference Technologies Projections 4-33
4.7.6 Advanced Technologies Projections 4-33
4.8 Commercial – Natural Gas Microturbine (CNM) 4-35
4.8.1 Equipment and Systems 4-35
4.8.2 Technology Specifications 4-35
4.8.3 Capital Cost Estimate 4-36
4.8.4 O&M Cost Estimate 4-37
4.8.5 Reference Technologies Projections 4-37
4.8.6 Advanced Technologies Projections 4-38
4.9 Commercial – Battery Energy Storage System (CBESS) 4-40
4.9.1 Equipment and Systems 4-40
4.9.2 Technology Specifications 4-40
4.9.3 Capital Cost Estimate 4-41
4.9.4 O&M Cost Estimate 4-41
4.9.5 Reference Technologies Projections 4-42
4.9.6 Advanced Technologies Projections 4-43

Section 5 INDUSTRIAL 5-1
5.1 Industrial – Natural Gas Reciprocating Engine-1,200 kW (IRE1) 5-1
5.1.1 Equipment and Systems 5-1
5.1.2 Technology Specifications 5-1
5.1.3 Capital Cost Estimate 5-1
5.1.4 O&M Cost Estimate 5-2
5.1.5 Reference Technologies Projections 5-3
5.1.6 Advanced Technologies Projections 5-4
5.2 Industrial – Natural Gas Reciprocating Engine – 3,000 kW (IRE3) 5-6
5.2.1 Equipment and Systems 5-6

5.2.2 Technology Specifications 5-6
5.2.3 Capital Cost Estimate 5-6
5.2.4 O&M Cost Estimate 5-7
5.2.5 Reference Technologies Projections 5-8
5.2.6 Advanced Technologies Projections 5-8
5.3 Industrial – Natural Gas Turbine – 4,600 kW (IGT5) 5-9
5.3.1 Equipment and Systems 5-9
5.3.2 Technology Specifications 5-10
5.3.3 Capital Cost Estimate 5-10
5.3.4 O&M Cost Estimate 5-11
5.3.5 Reference Technologies Projections 5-11
5.3.6 Advanced Technologies Projections 5-12
5.4 Industrial – Natural Gas Turbine – 10,360 kW (IGT10) 5-13
5.4.1 Equipment and Systems 5-13
5.4.2 Technology Specifications 5-14
5.4.3 Capital Cost Estimate 5-14
5.4.4 O&M Cost Estimate 5-15
5.4.5 Reference Technologies Projections 5-16
5.4.6 Advanced Technologies Projections 5-16
5.5 Industrial – Natural Gas Turbine – 23,200 kW (IGT25) 5-17
5.5.1 Equipment and Systems 5-17
5.5.2 Technology Specifications 5-17
5.5.3 Capital Cost Estimate 5-18
5.5.4 O&M Cost Estimate 5-19
5.5.5 Reference Technologies Projections 5-20
5.5.6 Advanced Technologies Projections 5-20
5.6 Industrial – Natural Gas Turbine – 45,000 kW (IGT45) 5-21
5.6.1 Equipment and Systems 5-21
5.6.2 Technology Specifications 5-22
5.6.3 Capital Cost Estimate 5-22
5.6.4 O&M Cost Estimate 5-23
5.6.5 Reference Technologies Projections 5-24
5.6.6 Advanced Technologies Projections 5-24
5.7 Industrial – Combined Cycle – 117,000 kW (ICC) 5-25
5.7.1 Equipment and Systems 5-25
5.7.2 Technology Specifications 5-26
5.7.3 Capital Cost Estimate 5-27
5.7.4 O&M Cost Estimate 5-28
5.7.5 Reference Technologies Projections 5-29
5.7.6 Advanced Technologies Projections 5-30
5.8 Industrial – Combined Cycle – 376,000 kW (ICC) 5-31
5.8.1 Equipment and Systems 5-31
5.8.2 Technology Specifications 5-32
5.8.3 Capital Cost Estimate 5-32
5.8.4 O&M Cost Estimate 5-33
5.8.5 Reference Technologies Projections 5-34

5.8.6 Advanced Technologies Projections 5-35
5.9 Industrial – Battery Energy Storage (IBESS) 5-37
5.9.1 Equipment and Systems 5-37
5.9.2 Technology Specifications 5-37
5.9.3 Capital Cost Estimate 5-38
5.9.4 O&M Estimate 5-38
5.9.5 Reference Technologies Projections 5-38
5.9.6 Advanced Technologies Projections 5-39

SECTION 6 CHP HEAT EXCHANGE EQUIPMENT 6-1
6.1 Introduction 6-1
6.1.1 Commercial and Industrial Reciprocating Engines CHP Heat Exchange System Description 6-1
6.1.2 Commercial Fuel Cell and Natural Gas Turbines CHP Heat Exchange System Description 6-1
6.1.3 Industrial Simple Cycle Natural Gas Turbines CHP Heat Exchange System Description 6-2
6.1.4 Industrial Combined Cycle Natural Gas Turbines CHP System Description 6-2
6.2 CHP Heat Exchange Equipment Specification 6-2
6.3 CHP Heat Exchange Equipment Cost Estimation 6-4
6.3.1 Commercial and Industrial Reciprocating Engines CHP Heat Exchange System Capital Costs 6-4
6.3.2 Commercial Fuel Cell and Natural Gas Turbines CHP Heat Exchange System Capital Costs 6-5
6.3.3 Industrial Simple Cycle Natural Gas Turbine CHP Heat Exchange System Capital Costs 6-6
6.3.4 Industrial Combined Cycle Natural Gas Turbines CHP Heat Exchange System Capital Costs 6-6

List of Appendices

A Acronyms
B References
C Technology Definitions and Calculations
D Summary of Industrial Technologies and Cost Data

List of Tables

Table 1-1. List of Technologies and Nominal System Capacity 1-3
Table 2-1. Natural Gas Specification 2-2
Table 2-2. Distillate Fuel Oil Specification 2-2
Table 2-3. Technology Performance Specifications – 2018 2-28
Table 3-1. Base Plant Site Capital Cost Estimate for RSS (2018) 3-3
Table 3-2. O&M Costs for RSS (6.6 kW-DC) 3-3
Table 3-3. Residential Small PV Performance and O&M – Reference New Equipment 3-4
Table 3-4. Residential Small PV Capital Costs – Reference New Equipment ($/kW-DC) 3-4
Table 3-5. Residential Small PV O&M – Advanced New Equipment 3-5
Table 3-6. Residential Small PV Capital Costs – Advanced New Equipment 3-6
Table 3-7. Base Plant Site Capital Cost Estimate for RWS (2018) 3-8
Table 3-8. Annual O&M Costs for RWS (10 kW) 3-8
Table 3-9. Residential Wind Performance and O&M – Reference New Equipment 3-9
Table 3-10. Residential Wind Capital Costs – Reference New Equipment 3-9
Table 3-11. Residential Wind O&M – Advanced New Equipment 3-10
Table 3-12. Residential Wind Capital Costs – Advanced New Equipment 3-10
Table 3-13. Residential Fuel Cell – 5 kW–AC (2018) **Error! Bookmark not defined.**
Table 3-14. Base Plant Site Capital Cost Estimate for RFC (2018) 3-12
Table 3-15. O&M Costs for RFC 3-13
Table 3-16. Residential Fuel Cell Performance and O&M – Reference New Equipment 3-13
Table 3-17 Residential Fuel Cell Capital Costs – Reference New Equipment 3-14
Table 3-18. Residential Fuel Cell O&M – Advanced New Equipment 3-15
Table 3-19. Residential Fuel Cell Capital Costs – Advanced New Equipment 3-16
Table 3-20. Base Plant Site Capital Cost Estimate for RBESS (2018) 3-17
Table 3-21. O&M Costs for RBESS (6 kW-DC) 3-18
Table 3-22. Residential RBESS Performance and O&M – Reference New Equipment 3-18
Table 3-23. Residential RBESS Capital Costs – Reference New Equipment 3-19
Table 3-24. Residential RBESS Performance and O&M – Advanced New Equipment 3-20
Table 3-25. Residential RBESS Capital Costs – Advanced Equipment 3-20
Table 4-1. Base Plant Site Capital Cost Estimate for CSS (2018) 4-3
Table 4-2. O&M Costs for CSS 4-3
Table 4-3. Commercial Small PV Performance and O&M – Reference New Equipment 4-4
Table 4-4. Commercial Small PV Capital Costs – Reference New Equipment 4-4

Table 4-5. Commercial Small PV O&M – Advanced New Equipment 4-5
Table 4-6. Commercial Small PV Capital Costs – Advanced New Equipment 4-6
Table 4-7. Base Plant Site Capital Cost Estimate for CLS Cost (2018)..... 4-7
Table 4-8. O&M Costs for CLS 4-8
Table 4-9. Commercial Large PV Performance and O&M – Reference New Equipment 4-8
Table 4-10. Commercial Large PV Capital Costs – Reference New Equipment ($/kW-DC) 4-9
Table 4-11. Commercial Large PV O&M – Advanced New Equipment..... 4-9
Table 4-12. Commercial Large PV Capital Costs – Advanced New Equipment 4-10
Table 4-13. Base Plant Site Capital Cost Estimate for Commercial Wind System (2018) 4-12
Table 4-14. Annual O&M Costs for CWS system (2 MW) 4-12
Table 4-15. Commercial Wind Performance and O&M – Reference New Equipment 4-13
Table 4-16 Commercial Wind Capital Costs – Reference New Equipment ($/kW-AC) 4-13
Table 4-17. Commercial Wind Performance and O&M – Advanced New Equipment 4-15
Table 4-18. Commercial Wind Capital Costs – Advanced New Equipment 4-15
Table 4-19. Commercial Fuel Cell – 250 kW–AC (2018) 4-17
Table 4-20. Commercial Fuel Cell Capital Costs – Reference New Equipment 4-18
Table 4-21. O&M Costs for CFC 4-18
Table 4-22. Commercial Fuel Cell Performance and O&M – Reference New Equipment 4-19
Table 4-23. Commercial Fuel Cell Capital Costs – Reference New Equipment ($/kW-AC) 4-19
Table 4-24. Commercial Fuel Cell Performance and O&M – Advanced New Equipment 4-21
Table 4-25. Commercial Fuel Cell Capital Costs – Advanced New Equipment 4-21
Table 4-26. Commercial Natural Gas Reciprocating Engine – 373 kW 4-22
Table 4-27. Base Plant Site Capital Cost Estimate for CNE (2018) 4-23
Table 4-28. O&M Costs for CNE – 373 kW 4-23
Table 4-29. Commercial Natural Gas Reciprocating Engine Performance and O&M – Reference New Equipment 4-24
Table 4-30. Commercial Natural Gas Reciprocating Engine Capital Costs – Reference New Equipment ($/kW-AC)..... 4-24
Table 4-31. Commercial Natural Gas Reciprocating Engine O&M – Advanced New Equipment 4-26
Table 4-32. Commercial Natural Gas Reciprocating Engine Capital Costs – Advanced New Equipment 4-26
Table 4-33. Commercial Oil Reciprocating Engine – 350 kW 4-27

Table 4-34. Base Plant Site Capital Cost Estimate for COE (2018) 4-28
Table 4-35. O&M Costs for COE 4-28
Table 4-36. Commercial O&M – Oil Reciprocating Engine – Reference New Equipment 4-29
Table 4-37. Commercial Oil Reciprocating Engine Capital Costs – Reference New Equipment ($/kW-AC) 4-29
Table 4-38. Commercial Oil Reciprocating Engine O&M – Advanced New Equipment 4-30
Table 4-39. Commercial Oil Reciprocating Engine Capital Costs – Advanced New Equipment 4-30
Table 4-40. Commercial – Natural Gas Turbine – 1,210 kW 4-31
Table 4-41. Base Plant Site Capital Cost Estimate for CNT 4-32
Table 4-42. O&M Costs for CNT 1,210 kW 4-32
Table 4-43. Commercial Natural Gas Turbine O&M – Reference New Equipment 4-33
Table 4-44. Commercial Natural Gas Turbine Capital Costs – Reference New Equipment ($/kW-AC) 4-33
Table 4-45. Commercial Natural Gas Turbine O&M — Advanced New Equipment 4-35
Table 4-46. Commercial Capital Costs – Natural Gas Turbine – Advanced New Equipment 4-35
Table 4-47. Commercial Natural Gas Microturbine – 200 kW 4-36
Table 4-48. Base Plant Site Capital Cost Estimate for CNM (2018) 4-37
Table 4-49. O&M Costs for CNM 4-37
Table 4-50. Commercial Natural Gas Microturbine O&M – Reference New Equipment 4-38
Table 4-51. Commercial Natural Gas Microturbine Capital Costs – Reference New Equipment ($/kW-AC) 4-38
Table 4-52. Assignment of Electrical Efficiencies to New Microturbine Units for Current and Future Years in Advanced Technology Case 4-39
Table 4-53. Commercial Natural Gas Microturbine O&M – Advanced New Equipment 4-39
Table 4-54. Commercial Natural Gas Microturbine Capital Costs — Advanced New Equipment 4-40
Table 4-55. Base Plant Site Capital Cost Estimate for CBESS Cost (2018)..... 4-41
Table 4-56. O&M Costs for CBESS (110 kW-DC) 4-42
Table 4-57. Commercial CBESS Performance and O&M – Reference New Equipment 4-42
Table 4-58. Commercial CBESS Capital Costs – Reference New Equipment..... 4-43
Table 4-59. Commercial CBESS Performance and O&M – Advanced New Equipment 4-43
Table 4-60. Commercial CBESS Capital Costs – Advanced New Equipment..... 4-44
Table 5-1. Industrial Natural Gas Reciprocating Engine – 1,200 kW-AC..... 5-1
Table 5-2. Base Plant site Capital Cost Estimate for IRE1 (2018) 5-2
Table 5-3. O&M Costs for IRE1 5-2

Table 5-4. 1,200 kW Industrial Natural Gas Reciprocating Engine Performance and O&M – Reference New Equipment 5-4
Table 5-5. 1,200 kW Industrial Natural Gas Reciprocating Engine Capital Costs – Reference New Equipment 5-4
Table 5-6. 1,200 kW Industrial Natural Gas Reciprocating Engine Performance and O&M – Advanced New Equipment 5-5
Table 5-7. 1,200 kW Industrial Capital Costs – Natural Gas Reciprocating Engine – Advanced New Equipment 5-5
Table 5-8. Industrial – Natural Gas Reciprocating Engine – 3,000 kW–AC 5-6
Table 5-9. Base Plant Site Capital Cost Estimate for IRE3 (2018) 5-7
Table 5-10. O&M Costs for IRE3 5-7
Table 5-11. 3,000 kW Industrial Natural Gas Reciprocating Engine O&M – Reference New Equipment 5-8
Table 5-12. 3,000 Industrial Natural Gas Reciprocating Engine Capital Costs – Reference New Equipment ($/kW-AC) 5-8
Table 5-13. 3,000 Industrial O&M – Natural Gas Reciprocating Engine – Advanced New Equipment 5-9
Table 5-14. Industrial Natural Gas Reciprocating Engine Capital Costs – Advanced New Equipment 5-9
Table 5-15. 3,000 Industrial – Natural Gas Turbine – 4,600 kW-AC 5-10
Table 5-16. Base Plant Site Capital Cost Estimate for IGT5 (2018) 5-11
Table 5-17. O&M Costs for IGT5 5-11
Table 5-18. 4,600 kW Industrial Natural Gas Turbine O&M – Reference New Equipment 5-12
Table 5-19. 4,600 kW Industrial Natural Gas Turbine Capital Costs– Reference New Equipment ($/kW-AC) 5-12
Table 5-20. 4,600 kW Industrial Natural Gas Turbine O&M – Advanced New Equipment 5-13
Table 5-21. 4,600 Industrial Natural Gas Turbine Capital Costs – Advanced New Equipment 5-13
Table 5-22. Industrial – Natural Gas Turbine – 10,360 kW–AC 5-14
Table 5-23. Base Plant Site Capital Cost Estimate for IGT10 (2018) 5-15
Table 5-24. O&M Costs for IGT10 5-15
Table 5-25. 10,360 kW Industrial Natural Gas Turbine O&M – Reference New Equipment 5-16
Table 5-26. 10,360 kW Industrial Natural Gas Turbine Capital Costs – Reference New Equipment ($/kW-AC) 5-16
Table 5-27. 10,360 kW Industrial Natural Gas Turbine O&M – Advanced New Equipment 5-17
Table 5-28. 10,360 kW Industrial Natural Gas Turbine Capital Costs – Advanced New Equipment 5-17
Table 5-29. Industrial Natural Gas Turbine – 23,200 kW-AC 5-18
Table 5-30. Base Plant Site Capital Cost Estimate for IGT25 (2018) 5-19
Table 5-31. O&M Costs for IGT25 5-19

Table 5-32. 23,200 kW Industrial Natural Gas Turbine O&M – Reference New Equipment 5-20
Table 5-33. 23,200 kW Industrial Natural Gas Turbine Capital Costs – Reference New Equipment ($/kW-AC) 5-20
Table 5-34. 23,200 kW Industrial Natural Gas Turbine O&M – Advanced New Equipment 5-21
Table 5-35. 23,200 kW Industrial Natural Gas Turbine Capital Costs – Advanced New Equipment 5-21
Table 5-36. Industrial – Natural Gas Turbine – 45,000 kW-AC 5-22
Table 5-37. Base Plant Site Capital Cost Estimate for IGT45 (2018) 5-23
Table 5-38. O&M Costs for IGT40 5-23
Table 5-39. 45,000 kW Industrial Natural Gas Turbine O&M – Reference New Equipment 5-24
Table 5-40. 45,000 kW Industrial Natural Gas Turbine Capital Costs – Reference New Equipment ($/kW-AC) 5-24
Table 5-41. 45,000 kW Industrial Natural Gas Turbine O&M – Advanced New Equipment 5-25
Table 5-42. 45,000 kW Industrial Natural Gas Turbine Capital Costs – Advanced New Equipment 5-25
Table 5-43. Industrial – Combined Cycle – 117,000 kW-AC 5-27
Table 5-44. Base Plant Site Capital Cost Estimate for ICC (2018) 5-28
Table 5-45. O&M Costs for ICC 5-28
Table 5-46. 117,000 kW Industrial Combined Cycle Performance and O&M – Reference New Equipment 5-29
Table 5-47. 117,000 kW Industrial Combined Cycle Capital Costs – Reference New Equipment ($/kW-AC) 5-29
Table 5-48. 117,000 kW Industrial Combined Cycle – Advanced New Equipment 5-30
Table 5-49. 117,000 kW Industrial Combined Cycle Capital Costs – Advanced New Equipment 5-31
Table 5-50. Industrial – Combine Cycle – 376,000 kW-AC 5-32
Table 5-51. Base Plant Site Capital Cost Estimate for ICC (2018) 5-33
Table 5-52. O&M Costs for ICC 5-34
Table 5-53. 376,000 kW Industrial Combined Cycle O&M – Reference New Equipment 5-34
Table 5-54. 376,000 kW Industrial Combined Cycle Capital Costs – Reference New Equipment ($/kW-AC) 5-35
Table 5-55. 376,000 kW Industrial Combined Cycle O&M – Advanced New Equipment 5-36
Table 5-56. 376,000 kW Industrial Combined Cycle Capital Costs – Advanced New Equipment 5-36
Table 5-57. Base Plant Site Capital Cost Estimate for IBESS Cost (2018) 5-38
Table 5-58. O&M Costs for CBESS (840 kW-DC) 5-38
Table 5-59. Industrial IBESS Performance and O&M – Reference New Equipment 5-39

Table 5-60. Industrial IBESS Capital Costs – Reference New Equipment ($/kW-DC) 5-39
Table 5-61. Industrial IBESS Performance and O&M – Advanced New Equipment 5-40
Table 5-62. Industrial IBESS Capital Costs – Advanced New Equipment..... 5-40
Table 6-1. CHP Technology Generic Heat Exchanger Specifications..... **Error! Bookmark not defined.**
Table 6-2. Reciprocating Engine Heat Exchange Equipment Capital Costs – New Equipment .....**Error! Bookmark not defined.**
Table 6-3. Commercial Fuel Cell and Natural Gas Turbine Heat Exchange Equipment Capital Costs – New Equipment**Error! Bookmark not defined.**
Table 6-4. Industrial Natural Gas Turbine Heat Exchange Equipment Capital Costs – New Equipment.....**Error! Bookmark not defined.**
Table 6-5. Industrial Combined Cycle Heat Exchange Equipment Capital Costs – New Equipment.....**Error! Bookmark not defined.**

List of Figures

Figure 2-1. Best Research-Cell Efficiencies 2-6
Figure 2-2. Basic Parts of a Small Wind Electrical System 2-9
Figure 2-3. AFC 2-11
Figure 2-4. SOFC 2-12
Figure 2-5. PAFC 2-13
Figure 2-6. PEMFC 2-14
Figure 2-7. MCFC 2-14
Figure 2-8. DMFC 2-15
Figure 2-9. Gas Engine Basic Components 2-17
Figure 5-1. Industrial Combined Cycle Design Configuration 5-26
Figure 5-2. Industrial Combined Cycle Design Configuration 5-31

Section 1
INTRODUCTION

This report presents the Leidos Engineering, LLC (Leidos) technology performance and cost assessment of distributed generation (DG), Battery Storage (BS), and combined heat and power (CHP) systems for residential and commercial building applications and industrial installations for various technologies. The technologies selected within the residential, commercial, and industrial sectors were specified by the Office of Energy Analysis within the U.S. Energy Information Administration (EIA) based upon the existing technologies represented in the National Energy Modeling System (NEMS). The assessment for each of the technologies considered includes the following:

- The Reference Residential Technologies and Industrial Technologies present information for 2015, 2018, 2020, 2030, 2040, and 2050. The Commercial Technologies present information for 2012, 2015, 2018, 2020, 2030, 2040, and 2050. As indicated, forward-looking assumptions are projected through 2050, in intervals of 10-year periods, starting with 2020.
- The Reference Equipment tables provided in this report present cost and performance assumptions for new equipment installation, allowing for a direct comparison of new equipment across the projection period. Differences consistently account for functional efficiency improvements, equipment and installation cost reductions because of improvement, and equipment and installation cost escalation.
- The cost estimates include site preparation, structures, equipment, electrical, distributable cost, engineering and design, subcontractor fee and budget contingency, and owner's costs (specific to Commercial and Industrial technologies). All costs are based on 2018 prices and wages for a U.S. national average with no unusual location impacts (e.g., urban construction constraints) or infrastructure needs (e.g., a project-dedicated interconnection upgrade cost). Commercial and Industrial technologies are priced in Sections 4 and 5 as CHP-ready for purposes of direct comparison, but do not account for CHP installation-related heat exchange system equipment. The CHP heat exchange system costs for generic commercial buildings and industrial facilities are provided separately in Section 6 for the purposes of direct comparison. Total CHP installed cost is obtained by adding the CHP-ready and heat exchange system capital cost estimates.
- Performance parameters include electric heat rate based on the higher heating value[1] (HHV) of the fuel, electric generating efficiency, total CHP efficiency, and fuel input rate.
- Other reported design and financial parameters include overnight construction costs, first year of residential/commercial/industrial application, typical unit size, contingencies, and fixed and variable operating costs.

[1] The higher heating value of a fuel is defined as the amount of heat released by a specified quantity once it is combusted and the products have returned to a temperature of 25ºC, which takes into account the latent heat of vaporization of water in the combustion products.

- The analysis was conducted so that the overnight cost estimates developed for use in NEMS for electric generating technologies are consistent in scope, accounting for overnight construction costs of power generating equipment, including the provisions for the basic interconnection to the grid at the site, but excluding development and financing costs.
- The cost estimates are broken down into primary categories of equipment, installation materials and labor, and miscellaneous other costs, which include engineering, construction management, and contingency, for Residential, Commercial and Industrial technologies. Owners costs are included in the Commercial and Industrial technologies as well.
- All cost values presented in this report are reported on a 2018 constant dollar (real dollar) basis. These real values can be consistently compared because values are expressed in dollars adjusted for purchasing power. Cost data are presented as a time series as if the prices were the same as they were in the base year (2018) and as if the dollar has constant purchasing power.[2]
- All Reference Technology Capital Costs for the years of 2012 and 2015 are based on 2018 Capital Costs per the constant dollar basis of this assessment. In addition, equipment costs for gas turbines were researched for the 2015 year and compared with the 2018 data, and those costs are stated based on any changes that were observed in the *Gas Turbine World 2019 TW Handbook Volume 34.*[3]
- All solar capital costs presented make use of the dataset contained in the Excel workbook provided to Leidos by EIA as a technology reference.[4]
- Appendix D presents summary tables by year for the Industrial Technologies cost data.
- The key factors expected to drive each technology's costs and the advanced technology descriptions are included in the Advanced Technology sections of this report.

[2] Dictionary of Business and Economics Terms, Jack P. Friedman.

[3] Gas Turbine World. (2019). *2019 Handbook, Volume 34.* https://gasturbineworld.com/shop/annual-handbook/2019-handbook-volume-34/.

[4] EIA_use_of_NREL_ATB_mid_PV_cost_declines_2019-07-02.xlsx.

1.1 Technologies Assessed

Table 1-1 lists all technologies to be assessed in this report.

Table 1-1.
List of Technologies and Nominal System Capacity

TECHNOLOGY	NOMINAL SYSTEM CAPACITY (1)
RESIDENTIAL	
Residential – Small Solar Photovoltaic	6.6 kW-DC
Residential – Wind	10 kW-AC
Residential – Fuel Cell	5 kW-AC
Residential – Battery Storage	6 kW-DC
COMMERCIAL	
Commercial – Small Solar Photovoltaic	38 kW-DC
Commercial – Large Solar Photovoltaic	1,118 kW-DC
Commercial – Wind	2,000 kW-AC
Commercial – Fuel Cell	250 kW-AC
Commercial – Natural Gas Engine	373 kW-AC
Commercial – Oil-fired Engine	350 kW-AC
Commercial – Natural Gas Turbine	1,210 kW-AC
Commercial – Natural Gas Microturbine	200 kW-AC
Commercial – Battery Storage	110 kW-DC
INDUSTRIAL	
Industrial – Reciprocating Engine	1,210 kW-AC
Industrial – Reciprocating Engine	3,000 kW-AC
Industrial – Natural Gas Turbine	4,600 kW-AC
Industrial – Natural Gas Turbine	10,360 kW-AC
Industrial – Natural Gas Turbine	23,200 kW-AC
Industrial – Natural Gas Turbine	45,000 kW-AC
Industrial – Combined Cycle	117,000 kW-AC
Industrial – Combined Cycle	376,000 kW-AC
Industrial – Battery Storage	840 kW-DC

(1) Kilowatt-alternating current (kW-AC), excepted as noted for kW-DC.

Section 2
GENERAL BASIS FOR TECHNOLOGY EVALUATION

This section specifies the general evaluation basis used for all reviewed technologies.

2.1 Leidos Background

Leidos is a science and technology solutions company working to address some of the world's toughest challenges in national security, health, and engineering.[5] Specific to this project for EIA, Leidos has supported the purchase, sale, financing, and owner's advisory consulting for tens of billions of dollars of power plants across the world in all commercial power generating technologies and many emerging technologies. This background has supported Leidos' acumen with respect to construction costs, operating costs, technology development and evolution, as well as trends in environmental regulation and compliance.

2.2 Base Fuel Characteristics

This section provides a general fuel basis for each of the fuel types used by the technologies considered in this report and listed in Table 1-1. Each of the technologies that combust a fuel has the ability to operate over a range of fuels; Table 2-1 and Table 2-2 show a typical fuel specification for natural gas and distillate fuel oil, respectively. For equipment that might engage in distillate fuel oil operations, the distillate fuel oil specifications imposed by the original equipment manufacturer typically follow those recommendations provided for in American Standards for Testing and Materials D396 – Standard Specification for Fuel Oils, Grades No. 1, 2, 4, and 4 (Light).

[5] Leidos' 33,000 employees support vital missions for our government and the commercial sector, develop innovative solutions to drive better outcomes, and defend our nation's digital and physical infrastructure from new world threats. Our engineering business makes What If possible for utility; manufacturing and industrial; lender and developer; oil, gas, and chemical; and government clients.

Table 2-1.
Natural Gas Specification

Component		Volume Percentage	
Methane	CH_4	93.9	
Ethane	C_2H_6	3.2	
Propane	C_3H_8	0.7	
n-Butane	C_4H_{10}	0.4	
Carbon Dioxide	CO_2	1.0	
Nitrogen	N_2	0.8	
Total		100.0	
		LHV (1)	**HHV** (2)
kJ/kg (3) MJ/scm (4)		47,764 35	52,970 39
Btu/lb (5) Btu/scf (6)		20,552 939	22,792 1,040

(1) Lower Heat Value (LHV)
(2) Higher Heat Value (HHV)
(3) Kilo joules per kilogram (kJ/kg)
(4) Mega joules per standard cubic meter (MJ/scm)
(5) British thermal units per pound (Btu/lb)
(6) Btu/standard cubic feet (Btu/scf)

Table 2-2.
Distillate Fuel Oil Specification

Component		Volume Percentage	
General Hydrocarbon	CxHy (1)	100	
		LHV	**HHV**
kJ/kg		32,000-45,000	35,520-49,950
Btu/lb		13,757-19,347	15,271-21,475

(1) CxHy with "x" being greater than 6.

2.3 Base Technology Descriptions

This section provides the descriptions of the base technologies analyzed.

2.3.1 Photovoltaic

The portion of the nation's electricity produced via large, utility-scale photovoltaic (PV) projects is approaching 2%.[6] Relative to utility-scale PV, distributed generation PV(DG PV) has certain advantages in residential and commercial markets, where smaller PV facilities at multiple sites can more effectively address energy needs. DG PV may serve

[6] U.S. Environmental Protection Agency. (2019). *Distributed Generation of Electricity and its Environmental Impacts.* https://www.epa.gov/energy/distributed-generation-electricity-and-its-environmental-impacts.

a single structure, such as a home or business, or it may be part of a microgrid (a smaller grid that is also tied into the larger electricity delivery system). When connected to the electric utility's lower voltage distribution lines, DG PV can help support delivery of clean, reliable power to customers and reduce electricity losses along transmission and distribution lines.[7] For this report, DG PV is the domain of individual residential and commercial customers who install PV modules, primarily on rooftops, to serve part or all of their own electrical energy needs.

This report restricts DG PV to residential and commercial PV arrays installed on rooftops, including rooftops of shade structures and carports, or on ground-mounted racking. The size of a residential PV array depends on the available rooftop area with adequate solar resource, most often south-facing roofs free of significant shading obstructions. The size of commercial PV installations also varies depending on the available roof space; a small stand-alone commercial building, such as a small retail store, will have a smaller PV capacity than a large retail store, industrial warehouse, or distribution center.

In most electric utility systems, power flows in one direction, from centralized generators to substations to end-use consumers. With DG, power can flow in both directions. DG PV power poses a unique set of benefits and challenges. In distributed solar applications, DG PV systems generate electricity for onsite consumption and interconnect with low-voltage transformers on the electric utility system. Deploying distributed PV can reduce transmission line losses, increase grid resilience, avoid generation costs, and reduce requirements to invest in new utility generation capacity. Common challenges include maintaining required voltage levels within regulated limits, coordinating protection system devices, and managing additional degradation (as a result of cycling) of the voltage control equipment, especially critical for longer distribution feeder circuits in rural areas.[8]

One of the main advantages of DG PV is that the generation can be electrically connected to the host's existing electric service interconnection. PV systems for residential and commercial applications are typically connected to the grid through low-voltage transformers, allowing for delivery of surplus electricity generation back to the utility. Grid connection is required to meet the host's electrical needs when the PV array is not generating power, such as at night and on low-irradiance days.

A DG PV system generally consists of PV modules, electrical wiring and conduit, direct current (DC)-to-alternating current (AC) inverters, racking hardware, and protection, disconnection, and metering equipment. PV modules may differ in size (60-cell versus 72-cell), but are the same shape, whether installed in residential, commercial, or utility-scale facilities.

A PV array produces DC electricity from sunlight absorbed by PV modules. Multiple PV modules are connected together to create a PV array, thereby increasing the amount

[7] Distributed Generation of Electricity and its Environmental Impacts; https://www.epa.gov/energy/distributed-generation-electricity-and-its-environmental-impacts.
[8] Greening the Grid: Distributed Generation; https://greeningthegrid.org/integration-in-depth/distributed-generation.

of DC electricity produced; however, AC electricity is used in homes and buildings, which requires the use of a DC-to-AC inverter, where the DC electricity is converted to AC electricity. The AC electricity is then connected to the electrical infrastructure of the host's site and can either be consumed by the host or transferred to the utility.

PV systems are generally designed with a higher DC capacity than can be converted to AC by the inverter to optimize the amount of electrical generation per installed DC capacity. A typically designed DC:AC ratio is 1.3:1, yet it can vary depending on each specific design, typically between 1:1 to 1.4:1, with the lower end being more common in the residential market.

Residential systems can use one of several inverter topologies, including string inverters, micro-inverters, or a combination of DC power optimizers and string inverters. The use of string inverters requires that individual modules be wired in series before being connected to the inverter. These series-wired configurations of solar modules are referred to as strings; hence, the terminology "*string inverter*." In residential installations, string inverters are typically mounted on an external wall or near the existing electrical distribution box in the garage or basement.

A micro-inverter is a module-level inverter, through which the DC power of each individual module is directly converted to AC power. Micro-inverters allow the output of each module to be controlled individually, which can be an advantage in residential installations where shading may affect the modules.

A DC optimizer is a module-level DC-to-DC convertor that controls the DC output of each module, minimizing mismatch losses between the modules in a string. In the case of a DC optimizer, the modules are still connected in strings, which are, in turn, connected to a string inverter.

Large commercial installations typically use string inverters or central inverters. In the former case, multiple string inverters may be mounted on a commercial rooftop. In the latter case, one or more large central inverters may be located externally on the ground level (such as in a parking lot area) or inside the building's electrical room. Smaller retail buildings do not typically have the space for larger central inverters, and they are more likely to use either string inverters or micro-inverters.

In addition to power losses from the inverter during the conversion of DC electricity to AC electricity, other power losses are inherent in PV installations. These losses include system-level degradation, shading, soiling, snow, and wiring losses. Generally, a module-level degradation between 0.5% and 0.75% per year is standard for system utilizing standard, high-quality crystalline silicon PV modules. For the reference PV technology projections, this report assumes an annual module degradation of 0.75% beyond the first year of operation, and for the advanced PV technology, this degradation is assumed to drop to 0.5% by year 2030. (Most module manufacturers do not have 25 years of module performance data, and they typically warrant a lower module degradation limit, between 0.4% and 0.6% per year beyond the first year of operation.)

In addition to degradation that occurs as PV modules age, the majority of crystalline silicon solar modules experience an additional, initial degradation when first exposed to sunlight. One form of this degradation is known as light-induced degradation (LID).

LID is a phenomenon found in crystalline silicon solar modules that causes a decrease in power output within the first several weeks of exposure to sunlight. The power loss typically ranges from 1% to 3% and depends upon the silicon wafer type and cell architecture. LID is caused by an interaction between the boron dopant atom used in p-type silicon wafers and unintentional (but unavoidable) oxygen impurities. To account for LID and other sources of degradation resulting only from initial exposure to sunlight, this report assumes a first-year degradation of 3% reducing to 0.5% to 0.75%, depending on the technology case. The reduction of first-year degradation is based on the assumption of further adoption by the PV industry of n-type (as opposed to p-type) doped silicon, or equivalent technology advances, which does not experience degradation associated with initial exposure to sunlight.

Shading losses depend on the specific site conditions, such as nearby trees, roof structures, and adjacent buildings. Soiling losses are caused by dirt and other organic build-up on the modules. Regions with measureable snowfall will have losses associated with snow cover on the panels during the winter months.

The orientation angle of the PV modules with respect to the sun affects the production of the modules. The ideal orientation for PV modules is as near as possible to direct 90 degree (°) alignment with the sun at all times. To accomplish this, some installations use single-axis tracking equipment, which tilts the modules to follow the sun throughout the day, albeit along a single axis. Single-axis trackers are most common in utility-scale installations in high irradiance areas, such as the Southwest United States. Tracking equipment is not typically used in residential or small commercial installations because it requires additional equipment, design, and cost. The space and load constraints of rooftop installations rule out the use of such tracking systems. Dual axis tracking systems are more commonly used in concentrating PV systems, and they are not typically used with conventional PV panels.

PV installations without tracking capabilities are known as fixed-tilt systems. Most residential PV arrays are mounted at the prevailing angle of the existing roof. For commercial and industrial roofs, which are typically low-slope or flat, modules are commonly installed on racking systems to tilt the modules at an angle. The factors that need to be considered include space constraints, allowable roof loads, wind exposure, maintenance, and shading from roofing structures or adjacent buildings.

The optimum tilt angle is close to the latitude of the installation. However, larger tilt angles (such as those used in ground-mount installations) would cause large up-lift forces on rooftop-mounted modules because of wind loads. Thus, most commercial rooftop systems use ballasted racking with the modules tilted at a slight angle, typically no more than 10° from horizontal.

Crystalline silicon and thin film are two major PV module technologies used in residential, commercial, and utility-scale installations. Crystalline silicon PV modules are currently the most common PV technology used for all types of installations, while thin film sees the majority of its use in utility-scale installations.

Crystalline silicon PV modules are manufactured either from individual cells made from square (multi-Si) or pseudo-square (mono-Si) wafers 157 millimeters (mm) in length per side. Each cell produces a peak output of several watts, with multiple cells

connected together to form a module. The most common forms use either 60 cells or 72 cells per module, the former in a 6- by 10-cell matrix and the latter in a 6- by 12-cell matrix. Increasingly, the 60 cells and 72 cells are being cut in half to improve module performance and durability. Two types of thin film PV modules have reached an appreciable installed base in the PV market: cadmium telluride (CdTe) PV modules and copper indium gallium diselenide (CIGS) PV modules. CdTe is used in the form of mono-crystalline thin films, whereas CIGS is mainly used in the form of polycrystalline thin films. Although the differences between these two types are fairly significant, module construction differences of mono versus poly are not that significant, and for this report, a discussion of mono versus poly is not necessary. Certain types of thin film PV technology is well suited for flexible substrates, and several companies have worked on developing flexible modules for building-integrated or building-applied PV applications (i.e., as shingles or laminates to be directly adhered to a roof).

Figure 2-1 provides an efficiency chronology of different types of semiconductor cells. Although multi-junction solar cells have achieved efficiencies of more than 45% in laboratory conditions, their cost has prevented adoption outside of highly specialized markets for energy production. Poly- and mono-crystalline silicon PV cells are currently the industry standard for DG and utility-scale energy production. Generally, thin film modules have a lower efficiency than crystalline silicon modules.

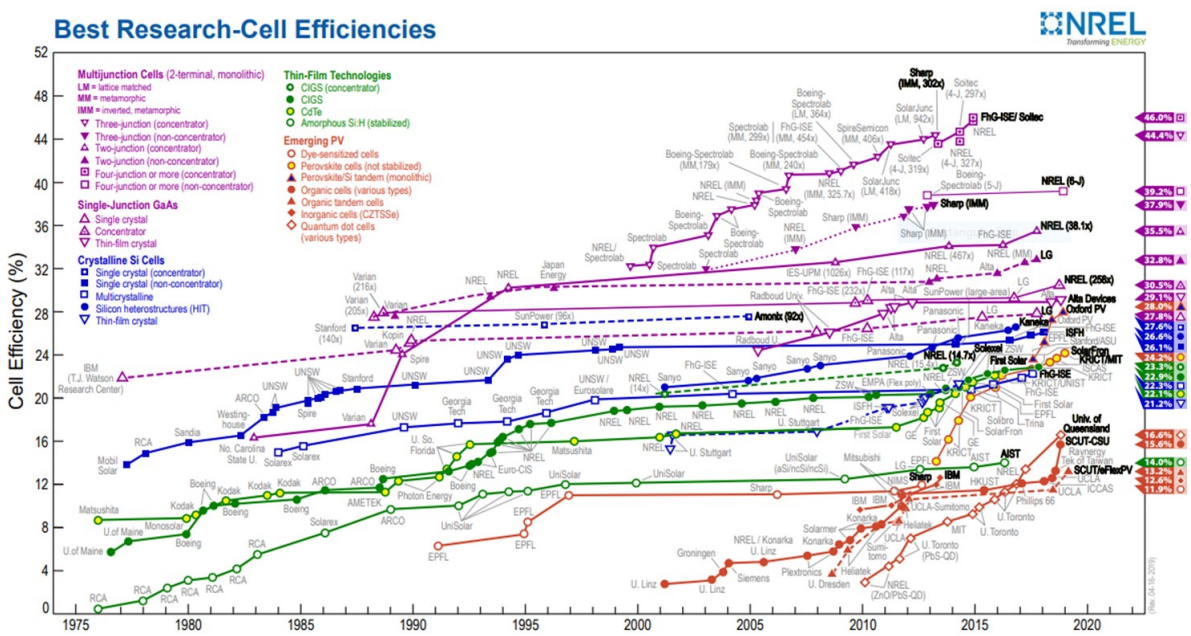

Source: National Renewable Energy Laboratory[9]

Figure 2-1. Best Research-Cell Efficiencies

[9] National Renewable Energy Laboratory. www.nrel.gov.

In terms of market, DG PV installations have grown significantly since 2012, but have shown signs of leveling off during the past two years. In addition to other market factors, the slowing of more mature state markets (e.g., Hawaii, Maryland, Colorado, Pennsylvania, Utah, and Arizona) is outpacing gains in other markets (e.g., Florida, Michigan, Virginia, and the Carolinas). This DG PV market trend is likely the beginning of a transition from incentivized market-fueled growth to a more sustainable industry model.[10,11]

In the fourth quarter of 2018, the U.S. solar market installed a total of 4,200 megawatt direct current (MW-DC) of PV generating capacity, bringing the total installed for the year of 2018 to 10,600 MW-DC. The fourth quarter of 2018 was the largest quarter for residential PV in two years, with a total capacity of 640 MW-DC installed during the quarter. The total 2018 residential installed PV capacity additions was an estimated 2,380 MW-DC, which was the same as 2017 residential installed PV capacity additions. In 2018, the commercial U.S. solar market installed capacity additions declined about 16% compared with 2017, which was an exceptional year for commercial solar unlikely to be repeated.[12]

On January 22, 2018, the Trump Administration levied a 30% tariff[13] on solar imports to the United States for the first year. The tariff covers imported solar cells and solar modules, otherwise known as *solar panels*. According to a fact sheet[14] released by the U.S. Trade Representative, this tariff will last for four years and will fall by 5% annually, dropping to a 15% tariff in 2021. This tariff does not apply to bifacial modules,[15] having only recently been applied to mainstream PV modules.[16]

The scope of this report includes the review of distributed solar technology for three different size categories—residential, small commercial, and large commercial. The capacity sizes and efficiencies are based on the corresponding 2017 categories in the 2018 *Tracking the Sun—2018 Edition*,[17] which included a residential analysis sample of about 150,000 systems and commercial analysis samples of more than 5,000 systems. The residential system is baselined to the 2017 capacity of 6.3 kW-DC and efficiency of 17.4%. The small and large commercial systems are baselined to the 2017 capacities of 36 kW-DC and 1,069 kW-DC, respectively, and an efficiency of 17.0%.

---

[10] Solar Energy Industries Association (SEIA). *"Solar Market Insight Report 2018 Year in Review"*.

[11] Bloomberg NEF, Business Council for Sustainable Energy (BCSE). *"2019 Sustainable Energy in America Factbook"*.

[12] PVmagazine. "*2019 PV installations to hit 123 GW, global balance shifting, says HIS Markit"*. https://www.pv-magazine.com/2018/12/19/2019-pv-installations-to-hit-123-gw-global-balance-shifting-says-ihs/.

[13] GTM website. *Trump Administration Issues 30% Solar Panel Import Tariff.* https://www.greentechmedia.com/articles/read/breaking-trump-admin-issues-a-30-solar-tariff.

[14] Executive Office of the President of the United States. (2018). *Section 201 Cases: Imported Large Residential Washing Machines and Imported Solar Cells and Modules*.

[15] GTM website. *Bifacial Modules Win Reprieve from US Solar Tariffs.* https://www.greentechmedia.com/articles/read/bifacial-modules-win-reprieve-from-u-s-solar-tariffs#gs.si6loa.

[16] Sandia National Lab forecasts that bifacial modules will make up 10% of world market share by 2020.

[17] Lawrence Berkeley National Laboratory. (2018). *Tracking the Sun-Installed Price Trends for Distributed Photovoltaic Systems in the United States-2018 Edition.* https://emp.lbl.gov/publications/tracking-sun-installed-price-trends.

2.3.2 Wind

Distributed wind, as defined by the U.S. Department of Energy, Office of Energy Efficiency and Renewable Energy Wind Energy Technologies Office,[18] is based on a wind project's location to the end user and power distribution infrastructure and not on the size of technology or project. Distributed wind energy systems are connected either on the customer side of the meter or directly to the local grid, unlike the utility wholesale power generated from large wind farms that is sent via a transmission line to substations for distribution. Distributed wind energy systems are commonly installed on residential, agricultural, commercial, institutional, and industrial sites. Distributed wind systems can vary in size, from a 1 kW or smaller wind turbine, which is off the grid, to a 10 kW wind turbine generator at a home site, to several multi-MW turbines at a manufacturing site or university campus. Commercially available wind systems have typically been installed at facilities that:

1) Have several hectares of available space, with at least 50 meters of set-back from the nearest neighboring property
2) Are away from residences
3) Have an electrical load large enough that the facility consumes nearly all the output of the commercial wind system.

Industrial facilities, farms, and schools have all hosted commercial wind systems.

Wind turbine generators typically include a rotor, a tail or yaw system, a tower, a generator, wiring, and balance of plant (BOP) components, such as inverters, controllers, and potentially batteries. Inverter life is typically not a separate discussion from wind turbine generator maintenance costs and is not addressed separately here. The wind passes across the blades of the rotor causing mechanical rotary motion to drive the generator. The generator produces AC or DC electricity, and the electricity may be conditioned for use in a battery energy storage system (BESS) or interconnection to the local electrical grid. See Figure 2-2.

Small wind turbine generators are considered in two groups: horizontal axis or vertical axis. We are currently aware of one independently certified vertical axis wind turbine generator available in the U.S. market; a Hi-VAWT model from Taiwan was certified in May 2019.[19] The most common are the horizontal axis wind turbine generators, which typically have two or three blades that are made of a composite material, such as fiberglass. The rotor diameter defines the swept area, which is the planar area (m^2) intercepted by the turbine rotor during rotation.[20] The rotor assembly, generator, and tail assembly are all attached to the top of a tower. The tower can be two types—either a free-standing, self-supporting tower or a guy-wired tower (guyed towers). Guyed towers could be composed of lattice sections, pipe or tubing with guy wires and a foundation. The radius for guy wires on guyed towers are typically one-half to three-quarters of the tower height, resulting in an increased footprint compared with an

[18] See https://www.energy.gov/eere/wind/about-doe-wind-energy-technologies-office
[19] See http://smallwindcertification.org/certified-turbines/ds3000
[20] Swept area is calculated using formula πr^2, where r equals length of rotor blade and pi equals 3.14159.

equivalent self-supported tower. Tilt-down towers can be lowered to the ground to allow for maintenance, but are typically for wind turbines that are 25 kW or smaller; the EoCycle EO20 and EO25 are tilt-down, certified small wind turbines.[21]

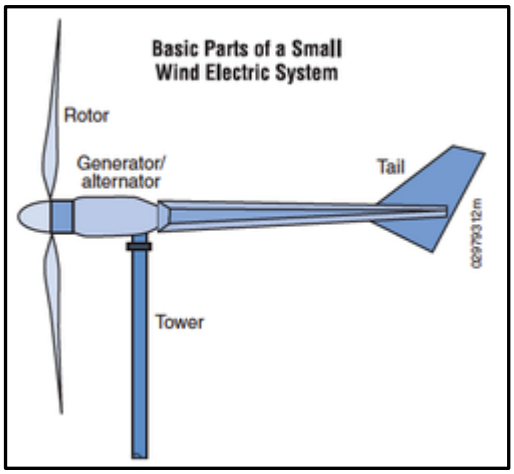

Source: U.S. Department of Energy, Energy Efficiency and Renewable Energy

Figure 2-2. Basic Parts of a Small Wind Electrical System

According to the Pacific Northwest National Laboratory: "A total of 1.7 MW of small wind capacity (turbines up through 100 kW) was deployed in 2017, down from 2.4 MW in 2016 and 4.3 MW in 2015. 67 percent of the 2017 small wind systems were installed in New York and Ohio."[22] The New York State Energy Research and Development Authority (NYSERDA) has a small wind incentive program,[23] and Ohio does not have an installed capacity limit on net metering facilities.[24] The annual installations of small wind systems peaked at about 25.6 MW in 2010 and dropped to about 7% of that peak in 2017. A detailed discussion of the reasons for the reduction of installation volume is outside the scope of this report, but primary contributors to the reduced demand for small wind from a peak in 2012 include:

- Phased-out incentives—such as the U.S. Treasury cash grant in-lieu of a 30% investment tax credit program—along with other state and federal programs
- Reduced funding through the U.S. Department of Agriculture Rural Energy for America Program, which funded 25 wind projects in 2013 with $1.2 million in grants, compared with funding 57 wind projects in 2012 with $2.6 million in grants
- Competitive PV and natural gas prices
- Lack of consumer confidence in small wind turbine generator reliability

The scope of this report includes the review of distributed wind technology of up to the 30 kW level for residential applications and MW-scale wind turbine generators for commercial applications. We are aware of 16 independently certified small wind

[21] See https://eocycle.com/small-wind-turbine/
[22] *2017 Distributed Wind Market Report*, Pacific Northwest National Laboratory, Orrell et. Al.
[23] https://www.nyserda.ny.gov/All-Programs/Programs/Small-Wind-Program.
[24] https://www.puco.ohio.gov/be-informed/consumer-topics/how-to-generate-wind-power-in-ohio/.

turbine generators with electrical capacity ranging from 0.16 kW to 27.2 kW. Mid-size turbines that range in size between 30 kW and 1 MW are not included in the review for commercial applications because we are unaware of any mid-sized wind turbine generators that are independently certified and commercially available in the United States.[25] MW-scale wind turbine generators are available from large industrial equipment manufacturers and have an electrical capacity ranging from about 1.7 MW to 4 MW; a 2 MW capacity wind turbine, readily available for use in the commercial marketplace, is assumed for performance and pricing purposes. MW-scale wind turbine generators are the same wind turbine generators widely deployed in large arrays that comprise utility-sized wind energy power plants.

2.3.3 Fuel Cell

A fuel cell is a device that converts chemical energy from fuel and oxygen directly into electricity. In other words, the fuel cell generates electricity through an electrochemical reaction. Every fuel cell has one positive electrode (i.e., cathode) and one negative electrode (i.e., anode). The electrodes are where the reactions take place that produce electricity. Every fuel cell also has an electrolyte, which may be solid or liquid, and separates the electrodes. The electrolyte carries electrically charged ions from one electrode to the other and a catalyst, which, if present, increases the speed of the reactions at the electrodes. Figure 2-3 shows a representation of fuel cell operation.

Fuel cells work by molecular hydrogen entering at the anode where it is separated into positively charged hydrogen ions and electrons. The electrolyte layer acts as an ion conductor and an electron insulator, allowing the hydrogen ions to pass through it, but not the electrons. The negatively charged electrons are forced through an external circuit and provide current to produce electricity. If AC electricity is required, the DC output from the fuel cell is routed to an inverter for conversion from DC to AC. Based on our experience with commercial solid oxide fuel cells (SOFC), the power electronics are integrated (unlike solar) and thus *inverter replacement is generally assumed to be coincident with stack replacement*. As such, the characterization of inverter life and cost is not relevant to the SOFC fuel cells discussion. During the expected life of the fuel cell projects (10 to 20 years), it is generally expected that the inverter will last the SOFC lifetime or be replaced when the stack is changed out. Therefore, this assumption is accounted for in the costs projected in the cost tables for commercial fuel cells.

Oxygen enters the fuel cell at the cathode, where it either combines with the electrons returning from the electrical circuit and the hydrogen ions that have traveled through the electrolyte from the anode, or the oxygen picks up electrons and then travels through the electrolyte to the anode where it combines with the hydrogen ions. Some fuel cells require pure hydrogen that is produced by various means including a reformer, gasification, electrolysis, and others.

[25] Research into the small wind market failed to show significant active distribution and/or services organizations in the US for mid-size WTGs. In many of the interviews with companies who distribute small wind equipment, the distributor suggested that small PV systems likely provide technical simplicity and cost/benefits resulting in better outcomes for the end-users.

Because each fuel cell develops a relatively low voltage, the cells are stacked (i.e., a grouping of individual cells) to produce a higher, more useful voltage. In accordance with the intended application, a fuel cell stack may contain only a few or as many as hundreds of individual cells layered together and connected in series to obtain a higher power output. Depending on the type of fuel cell, high-temperature waste heat from the process may be available for cogeneration applications.

Fuel cell types are generally classified according to the nature of the electrolyte they use. Each type requires particular materials and fuels and is suitable for different applications. There are six main types of fuel cells: alkaline fuel cell (AFC), SOFC, phosphoric acid fuel cell (PAFC), proton exchange membrane fuel cell (PEMFC), molten carbonate fuel cells (MCFC), and direct methanol fuel cell (DMFC).[26] AFC, MCFC, and PAFC all use liquid electrolytes, whereas, PEMFC, DMFC, and SOFC use solid electrolytes. All six types of fuel cells are discussed in detail below.

Alkaline Fuel Cell (AFC)

AFCs use an alkaline electrolyte such as potassium hydroxide in water and are generally fueled by pure hydrogen. Alkali fuel cells have an efficiency as high as 70% in some applications. The first AFCs operated at between 100 to 250 degrees Celsius (°C) (about 212 degrees to 480 degrees Fahrenheit [°F]) but typical operating temperatures are reported to now be about 70°C (about 160°F). As a result of the relatively low operating temperature, platinum-based catalysts are not necessary, and instead, a variety of non-precious metals can be used (e.g., nickel). The AFC stack size is in the range of 1 kW to 100 kW. See Figure 2-3.

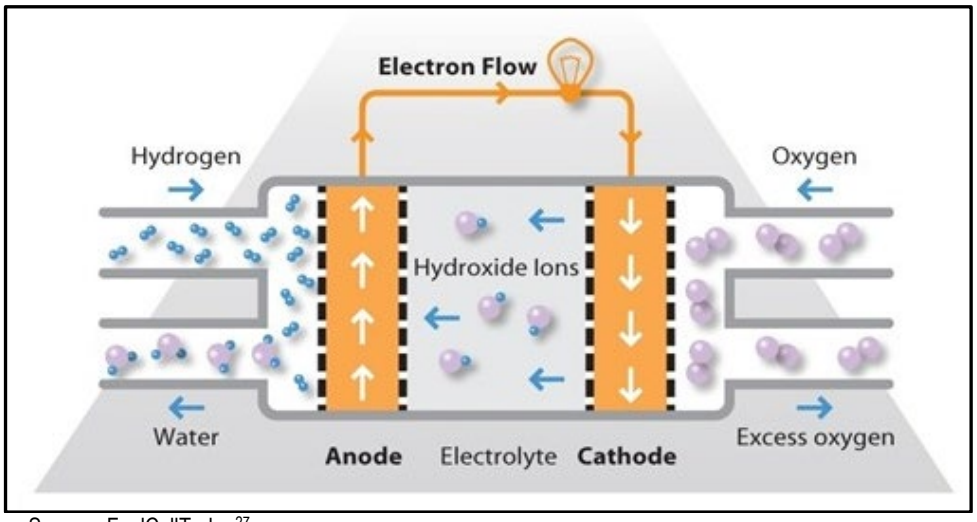

Source: FuelCellToday[27]

Figure 2-3. AFC

[26] Fuel Cell Today; www.fuelcelltoday.com.
[27] www.fuelcelltoday.com.

Solid Oxide Fuel Cell (SOFC)

SOFCs use a solid ceramic compound such as calcium oxide or zirconium oxide as the electrolyte. Industry-wide SOFC development has followed two basic designs—tubular and planar. In the planar design, components are assembled in flat stacks. In the tubular design, the tube forms the cathode, and cell components are constructed in layers around the tube.

SOFCs typically have operating temperatures in the range of about 800°C to 1,000°C (about 1,470°F to 1,830°F) and can have efficiencies of more than 60%. SOFC cells with outputs up to 300 kW are available. The high operating temperatures of SOFCs means that fuels can be reformed with the fuel cell itself, eliminating the need for external reforming and allowing the use of various hydrocarbon fuels (e.g., pipeline natural gas, renewable fuel). The waste heat, resulting from the high operating temperatures, can be recycled to make additional electricity with the potential to enhance overall efficiency to more than 80%. See Figure 2-4.

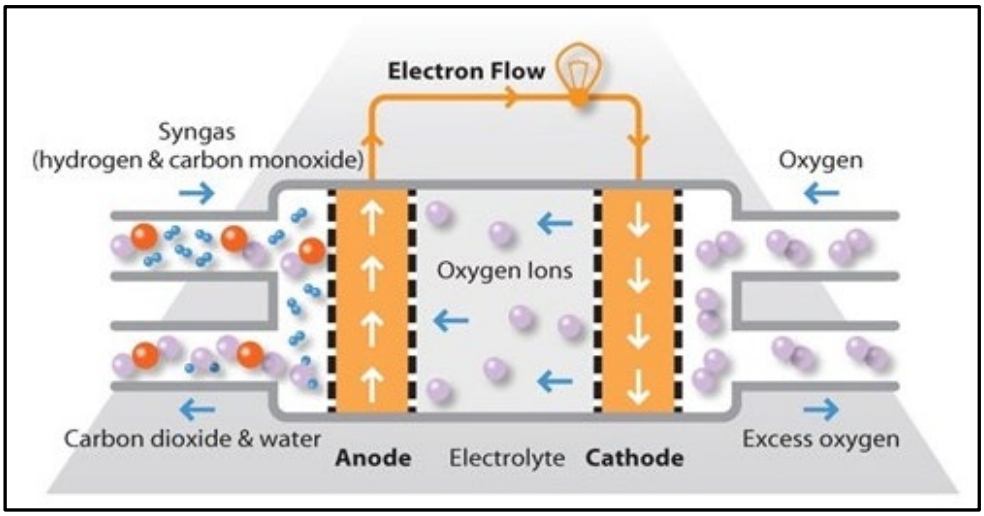

Source: FuelCellToday

Figure 2-4. SOFC

Phosphoric Acid Fuel Cell (PAFC)

PAFCs use phosphoric acid as the electrolyte, as depicted in Figure 2-5. The anode and cathode are made of a finely dispersed platinum catalyst on carbon and a silicon carbide structure. The efficiency for PAFC ranges between 40% and 80% with operating temperatures between 150°C and 200°C (about 300 F and 400 F). Higher range efficiencies are generally achieved when process heat is harnessed for cogeneration. PAFCs have outputs in the range of 100 kW to 400 kW, and units as large as 11 MW have been tested.

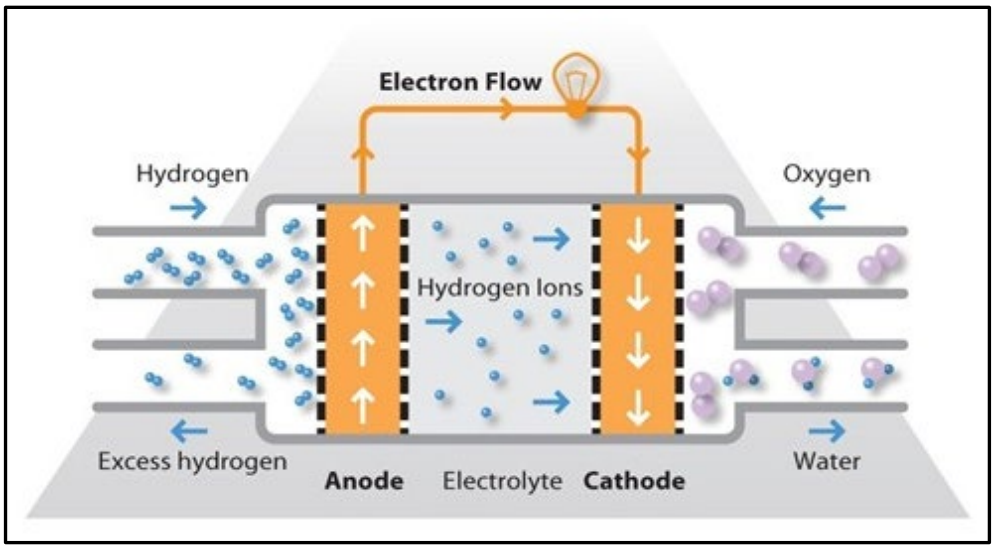

Source: FuelCellToday

Figure 2-5. PAFC

Proton Exchange Membrane Fuel Cell (PEMFC)

PEMFCs use a water-based, acidic polymer membrane as its electrolyte, with platinum-based electrodes. The PEMFC is depicted in Figure 2-6. Low-temperature PEMFCs have operating temperatures in the range of 80°C to 100°C (about 175°F to 212°F). Because of the temperature range for these fuel cells and the use of precious metal-based electrodes, these cells must operate on pure hydrogen. The efficiency of PEMFC fuel cells is about 40% to 60% with operating temperatures of about 80°C (175°F). The output from PEMFC fuel cells ranges from less than 1 kW to 500 kW. Because these fuel cells operate at low temperatures, they can be used for residential and automobile applications.

A variant of the PEMFC can operate at elevated temperatures and is referred to as the *high temperature PEMFC*. These fuel cells can operate up to 200°C (about 390°F) and use a mineral acid-based electrolyte instead of water-based electrolyte.

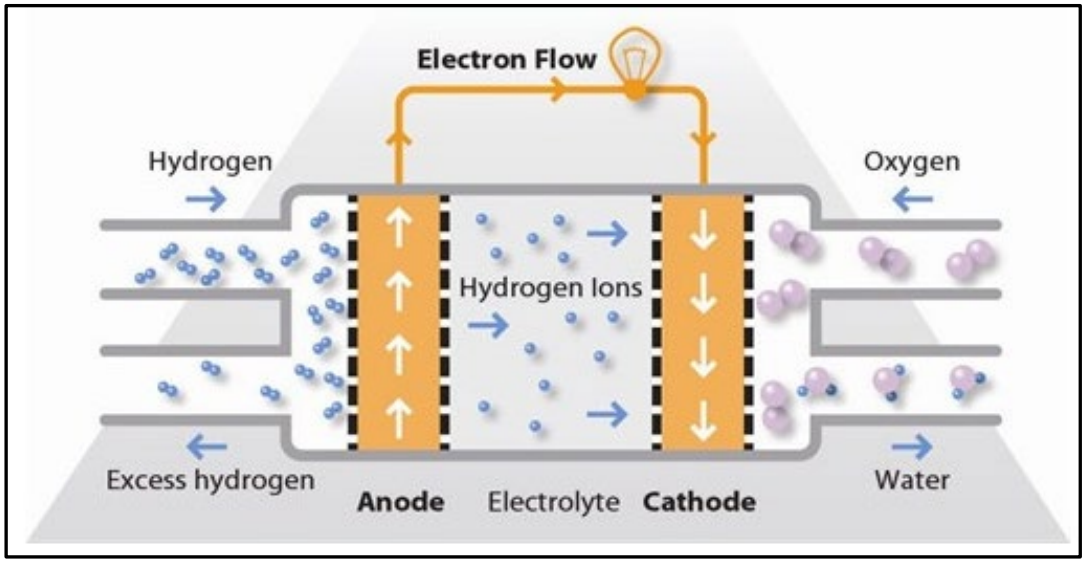

Source: FuelCellToday

Figure 2-6. PEMFC

Molten Carbonate Fuel Cell (MCFC)

MCFCs use high temperature compounds of molten carbonate salts suspended in a porous ceramic matrix as the electrolyte. Salts commonly used include lithium, sodium or magnesium carbonates. MCFC efficiencies are typically up to 60% with operating temperatures of about 650°C (1,200°F). Overall efficiencies can be more than 80% where process heat is also used. MCFCs have outputs in the range of up to about 4 MW. See Figure 2-7.

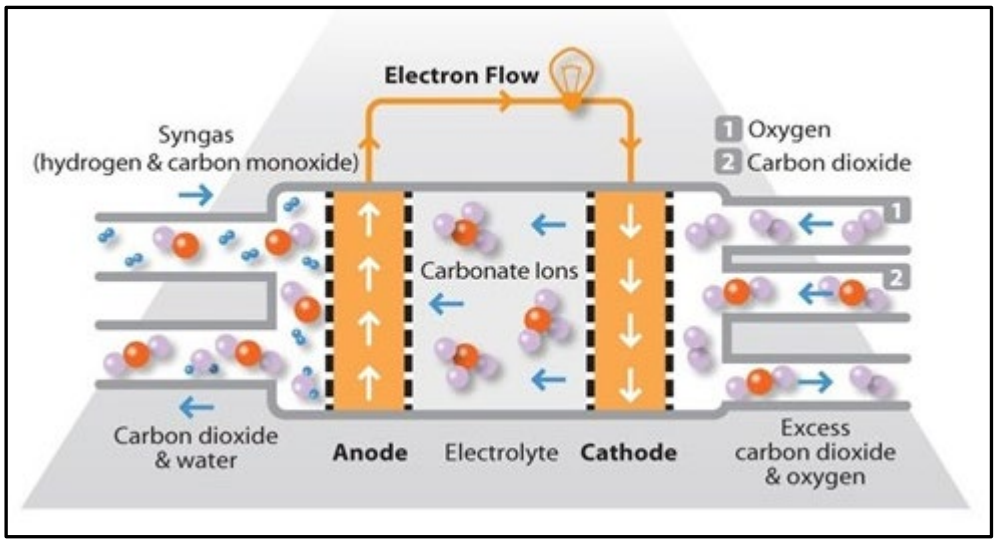

Source: FuelCellToday

Figure 2-7. MCFC

Direct Methanol Fuel Cell (DMFC)

DMFCs are similar to PEMFCs in that they use a polymer membrane as an electrolyte; however, they use a platinum-ruthenium catalyst on the anode that is able to draw

hydrogen from the liquid methanol fuel. This design feature eliminates the need for a fuel reformer, and pure methanol can be used as a fuel. DMFCs operate in the temperature range of 60°C to 130°C (about 140°F to 270°F). Practical efficiencies have been reported in the range of about 10% to 25%. See Figure 2-8.

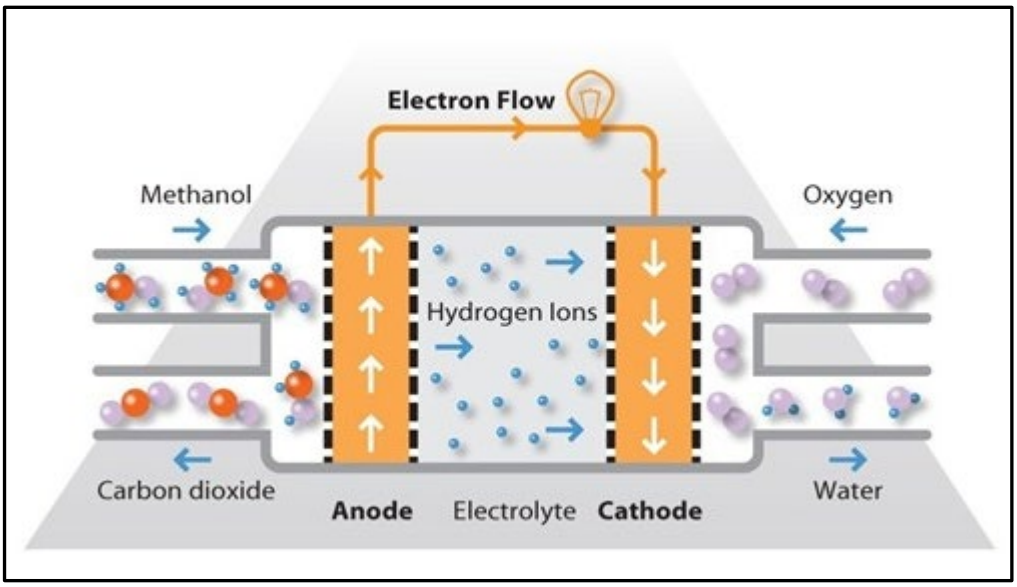

Source: FuelCellToday

Figure 2-8. DMFC

Stationary power remains a fundamentally important part of the fuel cell landscape. PAFC, MCFC, and SOFC dominate in the large-scale end of the worldwide sector while PEM and SOFC remain strongly present at smaller scales. Japan remains the leader in the development and deployment of small-scale systems, particularly for the residential market through the subsidized ENE-FARM program.[28] The total number of residential fuel cell systems deployed in Japan at the end of 2018 is reportedly approaching 300,000 with a year-on-year gain of about 50,000.[29] Korea and the United States lead industrial-scale fuel cell installations. In the stationary sector, utilities in Korea ordered more than 120 MW of fuel cell systems in 2016.[30] Further, in February 2018, the U.S. Federal Investment Tax Credit for fuel cells was reinstated retroactively from 2017 through 2021.

Based on the U.S. Department of Energy (DOE) CHP Installation Database,[31] which is maintained by ICF, Inc., 158 sites had fuel cell units installed as of December 31, 2017. Compared with previously reported data, this amount is an increase from 154 installations as of July 2013. In terms of capacity, there were 105.0 MW as of December 31, 2017, compared with a previously reported capacity of 68.1 MW as of

[28] ENE-FARM Program is a government program providing tax incentives and other measures to support the installation of 2.5 million fuel cell units by the year 2030.
[29] "*The Fuel Cell Industry Review 2018*". E4Tech http://www.fuelcellindustryreview.com/.
[30] "*Fuel Cell Technologies Market Report 2016*". U.S. Department of Energy, Office of Energy Efficiency and Renewable Energy, October 2017; https://www.energy.gov/sites/prod/files/2017/10/f37/fcto_2016_market_report.pdf.
[31] https://doe.icfwebservices.com/chpdb/.

July 2013 (i.e., an increase of 36.9 MW). In addition, these data show that the capacity per installation has increased since 2013 from 0.44 MW to 0.66 MW. As of December 31, 2017, about 96% of the sites with installed fuel cell units in the United States are located in four states: California (84 units), New York (29 units), Connecticut (27 units), and New Jersey (11 units). The DOE CHP Installation Database does not provide the basis for these observed changes and trends; however, as of September 2017, states with initiatives/incentives/funding for stationary FCs include California, Connecticut, Massachusetts, New Jersey, New York, and Pennsylvania.[32] Further, several factors may be contributing to a higher capacity per installation trend over time, including larger scale deployments and increased power density of product offerings.

The scope of this report includes the review of distributed fuel cell technology at the 5 kW size for residential applications using PEMFC technology, and the 250 kW size for commercial applications using SOFC technology.

2.3.4 Reciprocating Engine

Reciprocating engines have been used in many industries and are a mature and well-known technology. A reciprocating engine is an internal combustion engine, which uses fuel gas or distillate fuel oil as its fuel supply. Also known as a piston engine, a reciprocating engine mixes fuel with air compressed by a piston in a cylinder, which is ignited, causing a controlled combustion that produces additional pressure used to drive a piston. The energy released by sequential combustion in multiple cylinders is converted from the reciprocating motion of pistons into rotational motion using connecting rods attached to a crankshaft. The rotating crankshaft drives an electric generator. Heat released by combustion can be recovered to produce hot water and/or steam. Reciprocating engines can be either 4-stroke cycle or 2-stroke cycle, the former being more prevalent and the type considered in this report. Other configurations, including multiple crankshafts, are also rare. Reciprocating engines may be naturally aspirated (using the suction from the piston to entrain the combustion air), turbocharged (using an exhaust-driven turbine-compressor to pressurize the combustion air supply), or to a lesser degree, equipped with mechanically driven combustion air blowers. Turbocharged and blower-equipped units produce a higher power output for a given engine displacement, whereas, naturally aspirated units have lower output but also lower initial costs and require less maintenance. Natural gas-fueled engines are typically the engine of choice because of emission requirements in the United States; however, diesel, heavy fuel oil, landfill gas, and biofuels can also be used to power reciprocating engines. See Figure 2-9.

[32] *"State of the States: Fuel Cells in America 2017"*, U.S. Department of Energy, Office of Energy Efficiency and Renewable Energy, January 2018.

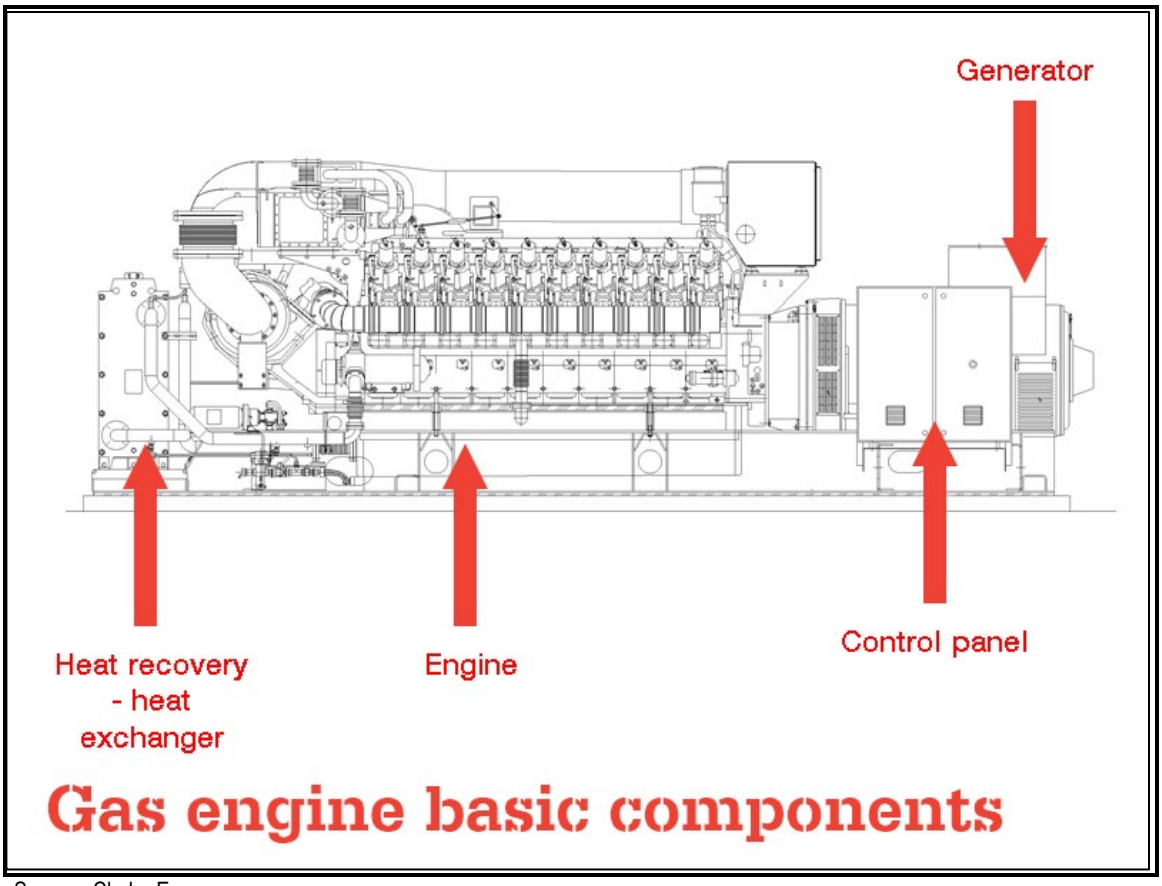

Source: Clarke-Energy

Figure 2-9. Gas Engine Basic Components

Reciprocating engines require fresh air, fuel, and a combustion source for each power stroke. Two methods are used to initiate combustion in the cylinders of reciprocating engines: spark ignition and compression ignition. Oil-based fuels such as diesel, heavy fuel oil, and biofuels will auto-ignite in compression ignition engines without the need of a spark; however, gas fuels, such as natural gas or landfill gas, must use either spark ignition or pilot oil (dual fuel) to initiate combustion because these fuels do not ignite spontaneously upon compression (auto-ignite) at the operating pressures of these engines. The use of dual-fuel engines is recently less common because pilot oil ignition produces higher emissions.

Electric generation efficiencies of reciprocating engines range from 30% to 40% lower heating value (LHV) for small naturally aspirated engines, and near 50% for larger turbocharged engines. Commercially available reciprocating engines for power generation range from 0.5 kW to more than 14 MW. Reciprocating engines can be used in a variety of ways because of their relatively large power output to unit size (power density), well-developed technology, attractive lead times, and recoverable thermal output. Applications for reciprocating engines include continuous or prime power generation, peak shaving, backup power, remote power, stand-by power, and CHP. Reciprocating engines are also used extensively as direct mechanical drives in applications such as water pumping, air and gas compression, chilling/refrigeration, and vehicle and ship propulsion.

A reciprocating engine has four sources of useable waste heat: exhaust gas, engine jacket, lube oil, and turbocharger. Recovered heat is in the form of hot water or low pressure steam (<30 pounds per square inch gauge [psig], 88 to 120° C). Some industrial CHP applications use the engine exhaust gas heat directly for process drying. Generally, the hot water and low pressure steam produced by reciprocating engine CHP systems is appropriate for low-to-moderate temperature process needs, space heating, potable water heating, and chilled water production, air conditioning, and/or refrigeration (via absorption chillers). Commercial and industrial uses of engine-produced CHP where hot water or low pressure steam is required include hospitals, universities, water treatment facilities, factories, steel mills, and food processing plants.

Reciprocating engines can operate at air-to-fuel ratios from 16:1 to more than 50:1 and compression ratios typically ranging between 14:1 and 23:1. Emissions control equipment is often required because of the composition of the exhaust combustion gases. The primary pollutants from reciprocating engines are nitrogen oxides (NO_X), carbon monoxide (CO), and volatile organic compounds.

Reciprocating engine technology has improved dramatically during the past three decades, primarily driven by economic and environmental pressures for power density improvements, increased fuel efficiency, and reduced emissions. The emissions signature of natural gas spark ignition engines in particular has improved significantly in the past decade through better design and control of the combustion process and through the use of exhaust catalysts. Low NO_X level emissions are available with advanced lean burn natural gas engines. Manufacturers often supply emissions equipment that can be added to the diesel-fired engines to comply with U.S. Environmental Protection Agency (EPA) Tier-4 emissions levels. In addition, some third-party providers offer the same emissions-reduction equipment options.

Oil-Fired Reciprocating Engine

Reciprocating engines of the commercial size considered for this report (350 kW) are typically packaged as a generator set designed for standby, peaking, or rental duty, which is typically in the range of 500 hours to 2,000 hours per year.

The scope of this report includes the review of distributed oil-fired reciprocating engine technology at the 300 kW level for commercial applications, which operate at 1,800 revolutions per minute (RPM), have six cylinders, and have compression ignition, but are re-rated at a lower output for continuous duty. The scope of this report does not include larger oil-fired engines because of the emissions limitations placed on stationary electric generating service in the United States.

Gas-Fired Reciprocating Engine

Unlike the commercial oil-fired reciprocating engines, all engines in these categories are spark-ignited. The scope of this report includes the review of distributed natural gas-fired reciprocating engine technology at the 373 kW level for commercial applications, which are rated for continuous duty, operate at 1,200 RPM, and have eight cylinders.

The scope of this report includes the review of distributed reciprocating engine technology at the 1,000 kW and 3,000 kW level for industrial applications, which are rated for continuous duty, operate at 1,800 RPM and 900 RPM, respectively, and have 16 cylinders and 12 cylinders, respectively.

2.3.5 Natural Gas Microturbine

Microturbines are small electricity generators that most commonly burn natural gas, although alternative fuels such as gasoline, kerosene, and diesel fuel/distillate heating oil can also be used. Similar to how conventional gas turbines burn natural gas, microturbines use the fuel to create high-speed rotation using the Brayton Cycle, which in turn rotates an electrical generator that produces electricity. Microturbines are typically configured with one or two shafts. Microturbines often have operating speeds in the 60,000 to 120,000 RPM range depending on the manufacturer.

In some cases, microturbines can be used in CHP operation and are widely used in DG applications. In the CHP application, the exhaust heat from the microturbine passes, if equipped, through a recuperator, which further heats the outlet air from the compressor before combustion, resulting in higher gas turbine efficiencies. The exhaust gas from the turbine pass through the recuperator, then through a heat exchanger, which transfers the heat to a fluid (usually water). The fluid can then be used for secondary purposes such as central heating, domestic hot water production, chilled water, and ice storage systems. In current applications, exhaust temperatures from microturbines might range from 500°F to upwards of 750°F, depending on the manufacturer.

Field testing on Microturbines began in 1997.[33] In 2005, the microturbine technologies rapidly evolved, and a 2005 report to the World Bank cited the leading manufacturers as promising a 50% reduction in capital costs for 20 years.[34]

Commercially available, cost-effective microturbine technology has been in the marketplace since about 2000. Some of the advantages realized by using microturbine technology include a high power-to-weight ratio, lower emissions and fewer moving parts compared with other technologies, and advanced foil-air bearings along with air cooling, which result in fewer maintenance intervals. Another advantage of microturbines is the use of advanced electronic power switching technology, which in some cases may mean the generator does not have to be synchronized with the power system to which it is connected.

Microturbines are usually manufactured with all of the previously mentioned sub-components in a single, skid-mounted unit about the size of an industrial-sized air compression unit. The use of an integrated unit makes field installation and

[33] Kalam, A., A. King, E. Moret, and U. Weerasinghe. "Combined heat and power systems: economic and policy barriers to growth." *Chemistry Central Journal*. 2012, 6(Suppl 1)S3. http://journal.chemistrycentral.com/content/6/S1/S3.

[34] Chubu Electric Power Co. *et al.* Technical and Economic Assessment: Off Grid, Mini-Grid and Grid Electrification Technologies: Summary Report. 2005 Prepared for Energy Unit, Energy and Water Department, The World Bank. Last accessed from https://cdm.unfccc.int/filestorage/3/F/V/3FV3HUZOKY7DRMRLUZHDSP4KI4MLLK/Enclosure%202.pdf?t=OGt8bm1yMHJwfDAQmZH_kyA7opTJrE4fHilP on April 13, 2015.

interconnection to the required utilities relatively simple for the end user. Today's marketplace typically offers size ranges from 10 kW to 250 kW.

To date, the stationary microturbine market has made strides in applications where CHP and combined cooling, heating, and power are important (e.g., UPS Data Center). Microturbines have also reached markets where fuel gas quality is more variable (e.g., landfill gases, anaerobic digester gases, and waste gases in oil fields) without fuel conditioning. For example, the FlexEnergy MT250 unit allows operating gas concentrations to range from 30% to 100%.[35]

Despite many possible applications, the microturbine industry has not experienced significant mass production compared with other technologies in this report. Capstone Turbine Corporation is the world's largest manufacturer of microturbines with most of the market share, but it has only produced about 9,000 units worldwide (30 kW to 10 MW, 953 cumulative MWs shipped) since 1998.[36] However, if natural gas prices remain low, some sources estimate that upwards of 19 MW to 57 MW of capacity from microturbines could be installed during the next five years.[37]

The scope of this report includes the review of distributed microturbine technology at the 200 kW level, which is a common size for commercial applications.

2.3.6 Natural Gas Turbine

Industrial gas turbines typically range in capacity from 1 MW to 300 MW. Gas turbines are used to power industrial or processing plants, building complexes, aircraft, trains, ships, and electrical generators.

Gas turbines are a type of internal combustion engine that operate using the Brayton cycle. They have an upstream rotating compressor coupled to a downstream turbine, with a combustion chamber located between the compressor and the turbine sections. The gas turbine uses air, which flows through a compressor section that pressurizes the air to high pressure. Energy is then added by spraying fuel into the air and igniting it so the combustion generates a high-temperature flow. The high-temperature, pressurized gas expands through the turbine section. The work produced by the turbine is used to drive the compressor and, in most cases, also powers an electric generator. The energy not used for shaft work remains in the exhaust gases, which have either a high temperature or a high velocity.

Gas turbines undergo three thermodynamic processes: isentropic compression, isobaric combustion, and isentropic expansion. Together, these processes make up the Brayton cycle. In a gas turbine, mechanical energy is irreversibly transformed into heat when gases are compressed as a result of internal friction and turbulence. Passage through the combustion chamber, where heat is added and the specific volume of the gases increase, is accompanied by a slight loss in pressure. During expansion amid the stator

[35] FlexEnergy, 2011. Presentation to Federal Utility Partnership Working Group on October 25, 2011. Last accessed from http://energy.gov/eere/femp/downloads/flexenergy on April 15, 2015.
[36] Capstone Turbine Corporation website. Last accessed from http://www.capstoneturbine.com/about on August 27, 2019.
[37] International Turbomachinery, "Worldwide Gas Turbine Forecast, November 2018. Turbomachinerymag.com.

and rotor blades of the turbine, irreversible energy transformation once again occurs. If the device has been designed to power a shaft, as with an industrial generator, the exit pressure will be as close to the entry pressure as possible. Some pressure must remain at the outlet to fully expel the exhaust gases. In the case of a jet engine, only enough pressure and energy is extracted from the flow to drive the compressor and other components. The remaining high-pressure gases are accelerated to provide a pressure stream that can be used to propel an aircraft.

Blade tip speed determines the maximum pressure ratios that can be obtained by the turbine and the compressor, which limits the maximum power and efficiency that can be obtained by the engine.

Mechanically, gas turbines can be less complex than internal combustion piston engines. However, the required precision manufacturing for components and temperature resistant alloys necessary for high efficiency often makes the construction of a simple turbine more complicated than piston engines. More sophisticated turbines may have multiple shafts, hundreds of turbine blades, movable stator blades, and a vast system of complex piping, combustors, and heat exchangers. Thrust bearings and journal bearings are a critical part of gas turbine design. Traditionally, gas turbines have been supplied with hydrodynamic oil bearings or oil-cooled ball bearings, but they may be equipped with roller type bearings as well. These types of bearings are being surpassed by foil bearings, which have been successfully used in microturbines and auxiliary power units.

Industrial gas turbines are closely integrated with the devices they power, often an electric generator and the secondary energy equipment that is used to recover residual energy, which is largely heat. Gas turbines range in sizes. Industrial gas turbines used solely for mechanical drive or used in collaboration with a recovery steam generator differ from power generating sets in that they are often smaller and feature a dual shaft design as opposed to single shaft. The power range varies from 1 MW up to 300 MW. These engines can be connected directly to either a pump or a compressor assembly for use in pipeline applications. The majority of these types of installations are used within the oil and gas industries. Oil and gas platforms require these engines to drive compressors to inject gas into the wells to force oil up another bore, gas and oil separation, or to compress gases or liquids for transportation. Gas turbines are often used to provide power for the host platform. These platforms do not typically use the engine in collaboration with a CHP system because gas is available at an extremely reduced cost. The same types of companies that use gas turbines for oil or liquid compression may use pump sets to drive the fluids to land and across pipelines in various intervals. Gas turbines are also used in mining and to power plants that produce chemicals and pharmaceuticals, food and beverages, automobiles, pulp and paper, and textiles. Gas turbines can also power hospitals, universities, and other building complexes.

The scope of this report includes the review of distributed natural gas turbine technology at the 1,210 kW size for commercial applications, and 4,600 kW, 10,360 kW, 23,200 kW, and 45,000 kW sizes for industrial applications.

2.3.7 Combined Cycle

A combined-cycle (CC) power plant uses a natural gas combustion turbine generator (CTG) and captures the waste combustion heat to create steam, which can be used to generate electricity. This combination of two power generation cycles enhances the efficiency of the plant. Although the electrical efficiency of a simple cycle power plant without waste heat utilization typically ranges between 25% and 40%, a CC can achieve electrical efficiencies of 60% or more. Supplementary firing in the boiler further enhances the overall power output but can lower efficiency. The high fuel utilization factor of this type of plant configuration contributes to low lifecycle costs.

The major equipment components of a CC facility include a combustion turbine and generator, a heat recovery steam generator boiler (HRSG) and a steam turbine and generator (STG). CC facilities can be set up with dual, and even triple, sets of CTGs and HRSGs to increase the amount of steam created and sent to the STG. Associated equipment needed in a CC facility includes generator step-up transformers, auxiliary transformers, control systems, a dedicated substation and numerous pumps, motors, and other auxiliary equipment. The CTG is subject to variation in output depending on the density of the air, which is affected by temperature and humidity. Output will decrease in warm weather and increase in cold weather as the air density changes affect mass flow through the gas turbine.

In the CC arrangement, fuel is fired in the CTG, which uses the Brayton power cycle. In this type of cycle, the hot combustion gases are expanded through a turbine, which drives an electric generator. Hot exhaust gas from the combustion turbine is passed through a HRSG, which is incorporated into a traditional steam Rankine cycle wherein water is vaporized in the HRSG to produce superheated steam, which is then supplied to the STG. The HRSGs typically produce steam at three pressure levels and can be provided with supplemental firing to augment the steam production, which acts to increase STG electric output. The exhaust steam from the STG is condensed to liquid in the condenser. Non-condensable gases are removed and are then collected in the condenser hot well. Makeup water from the demineralized water system is deaerated and supplied to the condenser hot well. Condensate pumps discharge the condensate water from the condenser hot well to the deaerator often via a condensate preheater section in the HRSG. Feedwater pumps discharge feedwater from the deaerator to the low-pressure, intermediate, and high-pressure economizer sections of the HRSG, which preheat the feedwater before discharge to the steam drums. In steam drums, the feedwater is heated to steam conditions, directed through moisture reducing separators and then superheated to complete the cycle.

The scope of this report includes the review of distributed CC natural gas technology at the 117,000 kW and 376,000 kW levels for industrial applications.

2.3.8 Battery Energy Storage Systems (BESS)

Batteries are not a producer of energy; rather, they provide a means of energy storage and discharge the stored energy as necessary to meet the load demand profile. Because of this flexibility, batteries are useful to use in conjunction with intermittent energy sources, which are sometimes unable to meet the entire diurnal load profile, unable to

respond to the needs of the grid, or generate a lot of energy during certain times of the day, particularly when power prices are low. Low-cost, reliable storage can enable more market penetration of renewable energy sources such as wind and solar.

Batteries are a form of chemical energy storage that employ an oxidation-reduction reaction whereby the oxidation and reduction are physically separated by an electrolyte. The electrochemical potential difference between the two sides of the reaction corresponds to the battery voltage, which drives the electricity generation. The exchange of electrons between the two reactions corresponds to the current that passes through the load.[38]

In 2018, lithium-ion batteries constituted about 73% of the non-hydropower (e.g., pumped storage) DG energy storage installations in the United States. From a technical standpoint, the lithium-ion battery has become the dominant BESS technology due to the following characteristics:

- High energy density
- Ability to provide high power for short-duration/fast-response applications (e.g., frequency regulation) as well as energy capacity for longer-duration applications
- High round-trip efficiency
- Capability to serve a broad range of applications

A typical lithium-ion battery has a cell level round-trip efficiency—defined as the ratio of the energy required to charge a battery compared with the available energy during discharge—of 95%, compared with 75% to 80% for lead-acid systems.[39]

Several lithium-ion battery chemistries are available in the industry today. Among those chemistries commonly available today for commercial use are nickel cobalt aluminum (NCA), nickel manganese cobalt (NMC), lithium nickel manganese oxide (LMO), lithium cobalt oxide (LCO), and lithium iron phosphate (LFP). Performance of lithium-ion batteries will degrade with time and usage. With regard to usage, the power capacity rating does not typically degrade significantly, but instead the rated power can be delivered for a shorter period of time, which corresponds to a degradation of the energy storage capability. The usage degradation is generally based on energy throughput, so the more the battery is cycled, charged, and discharged, the higher the degradation rates.

Lithium-ion batteries are also ubiquitous in portable electronics and electric vehicles, which allows the energy storage industry to leverage existing experience, availability, mass production techniques, and bankability to streamline the adoption of lithium-ion batteries into the power generation market place. In addition, the usage of lithium-ion batteries in the transportation market will allow the industry to achieve cost reductions and scale that would not otherwise be achievable.

In considering a BESS, components include the battery cells, system enclosure, power converter(s), and various controllers for safety, equipment protection, and power

[38] Pveducation.org
[39] 2019 Sustainable Energy in America Factbook; https://www.bcse.org/factbook/

conditioning. The battery is a DC element. For this report, in both residential and larger BESS, the BESS is connected to a bi-directional Power Conversion System (PCS). Various PCS topologies are available that may include 1) a bi-directional inverter, similar to that used in the PV solar but with the ability to flow current in both directions, or 2) a traditional mono-directional PV solar inverter paired with a bi-directional DC-DC converter. The selection of the appropriate topology is determined by how the BESS will be employed. The battery is connected to the PCS DC input side to form the system's storage capacity, and the PCS maintains AC output power quality while the DC input varies with the battery's state of charge and operating current.

The BESS enclosure typically includes multiple battery cells and will also include fuses, sensors, and disconnect switches to isolate faults and facilitate servicing of the charging power source(s). The BESS system's output voltage is constant and specified according to the load/grid or step-up transformer requirements.

Each BESS container has multiple levels of internal controls and monitoring. Each individual battery module is monitored by a Module Management Unit (MMU). For multiple batteries connected in series, often referred to as a battery string, each battery string is monitored by a Battery String Management Unit (BSMU), and multiple battery strings are monitored and controlled by a Battery Management System (BMS). In addition, each PCS has its own controller to support the many operational use cases of the smart inverters. Depending on the size of BESS, it may also be equipped with a fire detection or suppression system.

The scope of this report includes the review of distributed technology for battery storage at the 6 kW-DC, 110 kW-DC, and 840 kW-DC levels for residential, commercial, and industrial applications, respectively.

2.4 Cost Estimation Methodology

The approach taken in the cost analysis of capital and operating estimates is defined below. All costs in this report are reported in constant or real dollar costs associated with the reference year of 2018.

2.4.1 Capital Cost

A summary base capital cost estimate (Cost Estimate) was developed for each system technology, based on a generic facility of a certain size (capacity) and configuration, and assumed a non-specific U.S. location with no unusual location impacts (e.g., urban construction constraints) or infrastructure needs (e.g., a project-dedicated interconnection upgrade cost).

Each Cost Estimate was developed assuming costs in 2018 dollars on an overnight capital cost basis. In each Cost Estimate, the total project engineering, procurement, construction, and commissioning (EPC) cost was organized into the following categories:

- Equipment supply
- Installation—labor and materials

- Project engineering, construction management, and contingency (including project indirect costs)
- Owner's costs for some commercial and all industrial technologies

In addition to the Cost Estimate provided for the given technology, projected cost estimates for the installed system costs are made in 10-year increments from 2012 (for commercial only) and 2015, then the base year of 2018 and then 2020, 2030, 2040, and 2050.

Costing Scope

The equipment supply includes major equipment, including boilers, selective catalytic reduction (SCR), cooling tower, STG, PV modules, combustion turbine (CT), as well as auxiliary equipment such as pumps, condensers, electrical transformers, switchgear, motor control centers distributed control systems (DCS), and BOP equipment such as fire protection, as applicable to a given technology.

The installation labor and materials include bulk materials and commodities, such as pipe, fasteners, instrumentation, wire, cable tray, and lighting.

The estimated line item for engineering, construction management, and contingency includes engineering, distributable labor and materials, craft labor overtime and incentives, scaffolding costs, construction management, and start-up and commissioning. The fees and contingency include contractor overhead costs, fees and profit, and construction contingency. Contingency in this category is considered *contractor* contingency, which would be held by a given contractor to mitigate its risk in the construction of a project.

The owner's costs, which are addressed in the scope of this report for commercial and industrial (not residential) technologies, typically include development costs, preliminary feasibility and engineering studies, environmental studies and permitting, legal fees, project management (including third-party management), insurance costs, infrastructure interconnection costs (e.g., gas, electricity), and owner's contingency. The electrical interconnection cost includes an allowance for the plant switchyard and a subsequent interconnection to an *adjacent* (e.g., within a mile) plant, but it does not include significant transmission system upgrades.

2.4.2 Operation and Maintenance Costs

Operation and maintenance (O&M) costs consist of non-fuel O&M costs, owner's costs, and fuel-related costs. In evaluating the non-fuel O&M costs for use in the NEMS, this report focuses on the non-fuel O&M costs associated with the direct operation of the given power plant technology, referred to here as the Production Related Non-Fuel O&M Costs. This focus allows for comparison of O&M costs on the same basis across the various technologies.

Production Related Non-Fuel O&M Costs include the following categories:

- Fixed O&M (FOM)
- Variable O&M (VOM)

- Major Maintenance

Presented below is a brief summary of the cost sub-categories included within the categories of Fixed O&M, Variable O&M, and Major Maintenance. Further, Sections 3 through 5 provide more specific information related to Production Related Non-Fuel O&M Costs for each technology as related to the residential, commercial, and industrial segments.

The owner's costs, which are addressed in certain Commercial technologies and all Industrial technologies, include costs paid by plant owners that are plant-specific and can vary significantly between two virtually identical plants in the same geographic region. Depending on the project, examples of owner's costs might include property taxes, asset management fees, energy marketing fees, and insurance.

Fixed O&M

Fixed O&M (FOM) costs are those costs incurred that do not vary significantly with generation and generally include the following sub-categories:

- Staffing costs and monthly fees under pertinent operating agreements
- Typical bonuses paid to the plant operator
- Plant support equipment, which consists of equipment rentals and temporary labor
- Plant-related general and administrative costs (postage, telephone, etc.)
- Routine preventive and predictive maintenance performed during operations
- Maintenance of structures and grounds
- Other fees required for a project to participate in the relevant North American Electric Reliability Corporation region and be in good standing with the regulatory bodies

Routine preventive and predictive maintenance costs do not require an extended plant shutdown and include the following sub-categories:

- Maintenance of equipment such as water circuits, feed pumps, main steam piping, and demineralizer systems
- Maintenance of electric plant equipment, such as service water, DCS, condensate system, air filters, and plant electrical
- Maintenance of miscellaneous plant equipment such as communication equipment, instrument and service air, and water supply system
- Plant support equipment, such as tools, shop supplies and equipment rental, and safety supplies

Variable O&M

Variable O&M (VOM) costs are production related costs, which vary with electrical generation and are generally included in the following sub-categories, as applicable to the given power plant technology:

- Raw water
- Waste and wastewater disposal
- Purchased power (which is incurred inversely proportional to operating hours), demand charges and related utilities
- Chemicals, catalysts, and gases
- Ammonia (NH3) for SCR, as applicable
- Lubricants
- Consumable materials and supplies

Major Maintenance

Major maintenance costs generally require an extended outage, are typically undertaken no more than once per year, and are assumed to vary with electrical generation or the number of plant starts based on the given technology and specific original equipment manufacturer recommendations and requirements. These major maintenance costs include the following categories:

- Scheduled major overhaul for maintaining the prime mover equipment at a power plant, and/or costs associated with long-term service agreements associated with the prime movers
- Major maintenance labor
- Major maintenance spares parts
- BOP major maintenance, which is categorized as major maintenance on the equipment at the given plant that cannot be accomplished as part of routine maintenance or while the unit is in commercial operation

2.4.3 Regional Cost Factors

The technology capital costs use the national average and do not provide specific regional cost differences.

2.4.4 Technologies Performance Specifications

Table 2-3 provides a listing of the technologies reviewed in this report with their performance specifications.

Table 2-3.
Technology Performance Specifications – 2018

Technology	Fuel	Nominal Capacity (kW) (1)	Nominal Heat Rate (Btu/kWh) (2)	Capital Cost ($/kW) (3)	Fixed O&M ($/kW/yr) (4)	Variable O&M ($/kWh) (5)
Residential – Small Solar Photovoltaic (6)	Solar	6.6	N/A	3,402 $kW-DC	16.27	N/A
Residential – Wind	Wind	10	N/A	8,400	24-39	N/A
Residential – Fuel Cell	Gas	5	8,000	9,784	100.00	0.036
Residential – Battery Energy Storage	Electric	6	N/A	3,566 $kW-DC	-	0.0053
Commercial – Small Solar Photovoltaic	Solar	38	N/A	2,799 $kW-DC	19.75	N/A
Commercial – Large Solar Photovoltaic	Solar	1,118	N/A	2,099 $/kW-DC	21.00	N/A
Commercial – Wind	Wind	2,000	N/A	2,930	30-45	N/A
Commercial – Fuel Cell	Gas	250	6,100	5,859	317.60	0.092
Commercial – Natural Gas Engine	Gas	373	11,667	2,523	28.97	0.019
Commercial – Oil-Fired Engine	Oil	350	10,099	2,614	26.51	0.0191
Commercial- Natural Gas Turbine	Gas	1,210	11,550	2,075	18.03	0.0108
Commercial – Natural Gas Microturbine	Gas	200	11,364	3,348	30.60	0.0161
Commercial – Battery Energy Storage	Electric	110	N/A	3,116 $kW-DC	330	0.0056
Industrial – Reciprocating Engine – NG	Gas	1,200	8,705	2,469	19.29	0.0147
Industrial – Reciprocating Engine – NG	Gas	3,000	8,645	1,954	17.41	0.0131
Industrial – Natural Gas Turbine	Gas	4,600	9,768	1,644	16.80	0.0091
Industrial – Natural Gas Turbine	Gas	10,360	10,764	1,536	16.29	0.0070
Industrial – Natural Gas Turbine	Gas	23,200	10,234	1,074	14.84	0.0041
Industrial – Natural Gas Turbine	Gas	45,000	8,897	947	14.65	0.0033
Industrial – Combined Cycle	Gas	117,000	6,761	1,565	13.87	0.0024
Industrial – Combined Cycle	Gas	376,000	6,301	1,255	13.03	0.0016
Industrial – Battery Storage	Electric	840	N/A/	2,818 $/kW-DC	270	0.0050

(1) Capacity is net of auxiliary loads.
(2) Heat Rate is on a HHV basis for British thermal units per kW-hour (Btu/kWh).
(3) Capital Cost excludes financing-related costs (e.g., fees, interest during construction) since this varies by specific project. Dollars per kW (either AC or DC as noted in the table. All AC values except as noted).
(4) FOM costs exclude owner's costs (e.g., insurance, property taxes, and asset management fees).
(5) VOM costs include major maintenance.
(6) Capacity is specified in kW-DC for all PV technology cases.

Section 3
RESIDENTIAL

3.1 Residential – Small Solar Photovoltaic (RSS)

3.1.1 Equipment and Systems

This section describes the Residential Small Solar PV system (RSS), for which we have assumed an installed PV module capacity of 6.6 kW-DC in the year 2018. This capacity is baselined in the 2017 capacity and efficiency of 6.3 kW-DC and 17.4% with a capacity increase based on an efficiency increase to 18.5% with the system module area remaining constant. The assumed system has a DC to AC capacity of 1.1, which is typical for residential installations. Unless otherwise noted, *kW-DC* refers to DC capacity and *kW* refers to AC capacity.

3.1.2 Technology Specifications

For the reference technologies projection, we considered a rooftop-mounted, fixed-tilt PV array using commercially available crystalline silicon modules. The array is assumed to be equipped with string inverters and a remote monitoring system purposed to provide real-time and historical production data of the facility along with alarm functionality if system or equipment anomalies occur. A facility of this type is typically unstaffed, and monitoring and alarm functionality is assumed to be remote.

Photovoltaic modules are generally designed to last more than 25 years. Most manufacturers back their modules with both performance and workmanship warranties. Standard PV modules have a materials and workmanship warranty of at least 10 years. The performance warranty generally includes a 25-year annual capacity degradation limit and, depending on the module technology, may include an additional first-year capacity degradation. The warrantied degradation limits vary according to technology and manufacturer. For crystalline silicon technology warranties, the warranty generally bounds the 25-year capacity degradation to between 0.4% and 0.6%. String inverters typically have a 10-year warranty, with extensions available to cover 20 years total. With these warranty terms in mind, we have assumed 25 years as the lifetime for the PV modules with the warrantied lifetime transitioning to 30 years by the year 2030. For the string inverters, we have assumed 15 years as the warrantied lifetime. Certain micro-inverters and DC optimizers are available with 25-year warranties.

For cost projections, we have considered module efficiency as the main driver of cost reductions over time. In the reference technologies case, the first years (2015 and 2018) of our projection assume the use of primarily p-type crystalline silicon, with a transition to modules with performance enhancing characteristics, such as split-cell n-type mono-crystalline silicon cells, in the years from 2020 to 2025. The switch to n-type silicon allows for higher efficiencies and a lower degradation rate in the first year of operation from the elimination/mitigation of LID. Silicon PV modules using n-type monocrystalline split cells are more common in today's solar market in higher performing modules. With time and scale, this technology may see wider adoption.

The advanced technologies case assumes a significant adoption of n-type silicon modules during the next year to dramatically reduce first-year degradation losses associated with phenomena such as LID.

The advanced technologies case assumes a five-year acceleration in module efficiency improvements from the reference technologies case, with a new, higher efficiency PV crystalline silicon module technology adopted by the solar market in the 2030 timeframe. Likely technology improvements include heterojunction cells, enhanced passivated emitters, and module innovations that will increase the cell-to-module (CTM) power ratio to greater than one.[40] The CTM power ratio is the sum of the powers of all the individual cells in a module divided by the module power and is typically less than 100%. By the simultaneous exploitation of module optics and loss minimization, the typical CTM ratio will soon exceed 100%. Generally, to be adopted, the new technology innovations should have both higher efficiency and lower manufacturing costs. The advanced technologies case also assumes that by 2040, the solar market is adopting higher performance modules with cells that exceed the 33% Shockley–Queisser efficiency limit by exploiting innovation such as alternative materials (e.g., perovskite), tandem cells, and carrier multiplication.[41]

3.1.3 Capital Cost Estimate

The Cost Estimate for the RSS with a nominal capacity of 6.6 kW-DC is $3,402/kW-DC (2018 dollars)**.**

The Cost Estimate for the RSS assumes installation on residential roofs, and homes that have a roof orientation that satisfies maximum efficiency of solar irradiancy, and usually conforming to a footprint similar to the structure's roof surface area. Peripheral electrical equipment necessary to complement the intermittent power plant needs has been added to the estimate. The cost estimate is for a new (not replacement) installation that includes site preparation, structures, equipment, electrical, distributable cost, engineering and design, and subcontractor fee and budget contingency. All numbers in these estimates are based on prices and wages for the national average of the United States.

Table 3-1 summarizes the Cost Estimate categories for the RSS system.

[40] Clean Technica: *"How Efficient will Solar PV Be in the Future? 10-Year Predictions for the Industry":* https://cleantechnica.com/2017/08/15/efficient-will-solar-pv-future-10-year-predictions-industry/

[41] PV Magazine: *"Solar panel theoretical efficiency limit increases by 33%"*. https://www.pv-magazine.com/2018/10/17/solar-panel-theoretical-efficiency-limit-increases-by-33/

Table 3-1.
Base Plant Site Capital Cost Estimate for RSS (2018)

Technology: RSS
Nominal Capacity (ISO) (1): 6.6 kW-DC
Nominal Heat Rate (ISO): N/A

Capital Cost Category	($/kW-DC) (2018 $)
PV Modules (2)	531
Racks	373
Inverters	384
Equipment Supply Subtotal	**1,288**
Installation Materials and Labor	1,546
Engineering/Construction Management/Contingency (3)	567
Total Installed EPC Project (Owners Costs included above)	**3,401**

(1) International Standards Organization (ISO).
(2) The module capital cost in this table assumes 6.6 kW-DC of PV module capacity as referenced to the 6 kW-AC capacity assumed for the RSS system.
(3) Includes engineering, distributable costs, construction management, and start-up.

3.1.4 O&M Estimate

Table 3-2 presents the O&M costs for the RSS. Fixed O&M costs for an RSS might typically include those costs associated with scheduled and unscheduled maintenance, and costs associated with remote monitoring. A PV system typically has no variable O&M costs because the costs do not typically vary with capacity factor (CF).

Table 3-2.
O&M Costs for RSS (6.6 kW-DC)

Technology	RSS
Fixed O&M	$16.00/kW-DC per year
Variable O&M	N/A

3.1.5 Reference Technologies Projections

The following tables present the performance characteristics and cost projections for RSS. Data show that RSS capacity has been significantly increasing since 2000. This trend is attributed in part, by improved efficiency and, in part, by increased system area as a result of increased affordability. Our RSS projections assume a system area increase corresponding to about two modules from 2015 to 2018, which is consistent with current residential solar market capacities. The RSS system area remains constant in subsequent years based on the assumption that residential rooftop area constrains further area increases. Increased module capacity results from cell efficiency

improvements and keeping panel physical size unchanged. This capacity representation approach differs from that of the other technologies, but was agreed upon with EIA.

Table 3-3.
Residential Small PV Performance and O&M – Reference New Equipment (1)

Year	2015	2018	2020	2030	2040	2050
Module Capacity (kW-DC) (2)	6.0	6.6	7.3	9.3	10.0	10.1
Capacity Factor (%)	17.0	17.0	17.0	17.0	17.0	17.0
Hours of Operation (hrs)	1,489	1,489	1,489	1,489	1,489	1,489
Module Efficiency (%)	16.5	18.5	20.3	26.0	28.0	28.3
First-Year Degradation (%) (3)	3.0	3.0	1.9	0.75	0.75	0.75
Subsequent-Year Degradation (%)	0.75	0.75	0.75	0.75	0.75	0.75
Module Life (years) (4)	25	25	25	30	30	30
Inverter Life (years) (5)	15	15	20	25	25	25
Variable O&M Costs ($/kWh)(6) (7)	N/A	N/A	N/A	N/A	N/A	N/A
Fixed O&M Costs ($/kW-year) (7)	18.54	18.00	18.00	12.77	11.88	11.76

(1) Assumes cost of new system installation across the projection period (not replacement cost).
(2) Assumes physical module size remains the same, with module capacity based on module efficiency relative to 2018.
(3) Assumes transition to n-type silicon wafers from 2020 through 2025 (higher efficiency and a lower first year degradation).
(4) Modules generally come with a standard 25-year performance warranty, but are designed for longer life. Assumes performance warranties will be improved to 30 years starting in 2030.
(5) String inverters generally come with a standard 10-year warranty, with warranty extensions available to 20 years. An inverter lifetime of 15 years has been assumed in 2015, improving to 25 years in 2025.
(6) Residential modules and inverters have no variable O&M costs; units are replaced if defective.
(7) Variable and fixed O&M represented in constant 2018 dollars.

Table 3-4.
Residential Small PV Capital Costs – Reference New Equipment (1) (2)
($/kW-DC)

Year	2015	2018	2020	2030	2040	2050
PV Modules for RSS Reference Case (3)	732	531	484	378	350	347
Racks	421	373	340	265	246	244
Inverters	421	384	350	273	253	251
Equipment Supply Subtotal	**1,574**	**1,288**	**1,174**	**916**	**849**	**842**
Installation Labor and Materials	1,822	1,546	1,408	1,100	1,021	1,011
Engineering/Construction Management/Contingency (4)	624	567	517	403	374	371
Owners Costs	NA	NA	NA	NA	NA	NA
Total Installed Cost	4,020	3,401	3,099	2,419	2,244	2,224

(1) Costs are presented as constant 2018 dollars.
(2) Assumes cost of new system installation across the projection period (not replacement cost).
(3) Cost for 6.6 to 10.1 kW-DC modules, referenced to the RSS inverter capacities ranging from 6 to 9.2 kW. Module physical size assumed to remain the same, but capacity assumed to increase due to increasing module efficiency.
(4) Module installation assumed to Include engineering, distributable costs, construction management, and start-up.

3.1.6 Advanced Technologies Projection

The following tables present the performance characteristics and cost projections for advanced RSS. Module efficiency is assumed to increase at a faster rate compared with the reference case. In association with the discussion in Section 3.1.2, high concentration, multi-junction solar cells have been demonstrated at laboratory-scale to achieve an efficiency of up to 46.0% with a four-junction inverted metamorphic multijunction (IMM) solar cell.[42] Module efficiencies of up to 38.9% have been achieved with concentrator technology.[43]

Table 3-5.
Residential Small PV O&M – Advanced New Equipment (1) (2)

Year	2015	2018	2020	2030	2040	2050
Module Capacity (kW-DC)	6.0	6.6	7.3	11.1	12.5	14.3
Inverter Capacity (kW)	5.0	6.60	6.6	10.1	11.4	13.0
Capacity Factor (%)	17.0	17.0	17.0	17.0	17.0	17.0
Hours of Operation (hrs)	1,489	1,489	1,489	1,489	1,489	1,489
Module Efficiency (%)	16.5	18.5	20.3	30.9	35.0	40.0
First-Year Degradation (%)	3.0	3.0	1.9	0.75	0.75	0.75
Subsequent-Year Degradation (%)	0.75	0.75	0.75	0.5	0.5	0.5
Module Life (Years)(4)	25	25	25	30	30	30
Inverter Life (Years) (5)	15	15	20	25	25	25
Variable O&M Costs ($/kWh) (6) (7)	N/A	N/A	N/A	N/A	N/A	N/A
Fixed O&M Costs ($/kW/year) (7)	18.54	18.00	16.27	10.70	9.50	8.30

(1) For the advanced technologies reference case, module efficiency is assumed to increase at a faster rate compared with the reference case, taking advantage of advanced concentrator and multijunction solar cells technology research.
(2) Assumes new system installations covering the projection period.
(3) Assumes switch to n-type silicon wafers before 2025 (these will have lower first year degradation). Other advanced technologies beyond 2025.
(4) Modules generally come with a standard 25-year performance warranty, but are designed for longer life. Assumes performance warranties will be improved to 30 years starting in 2030.
(5) String inverters generally come with a standard 10-year warranty, with warranty extensions available to 20 years. An inverter lifetime of 15 years has been assumed in 2015, improving to 25 years in 2025.
(6) Residential inverters have minimal O&M costs; the units are replaced if defective.
(7) Variable and fixed O&M costs represented in constant 2018 dollars.

[42] NREL Research, "High-Concentration III-V Multijunction Solar Cells," https://www.nrel.gov/pv/high-concentration-iii-v-multijunction-solar-cells.html, 2019.
[43] Fraunhofer Institute for Solar Energy Systems, ISE, "Photovoltaics Report," March 2019, https://www.ise.fraunhofer.de/content/dam/ise/de/documents/publications/studies/Photovoltaics-Report.pdf

Table 3-6.
Residential Small PV Capital Costs – Advanced New Equipment (1) (2)
($/kW-DC)

Year	2015	2018	2020	2030	2040	2050
PV Modules for RSS Reference Case(3)	732	531	484	318	281	246
Racks	421	373	340	223	197	173
Inverters	421	384	350	230	203	178
Equipment Supply Subtotal	**1,574**	**1,288**	**1174**	**771**	**681**	**597**
Installation Labor and Materials	1,822	1,546	1,408	925	817	715
Engineering/Construction Management/ Contingency(4)	624	567	517	339	300	262
Owners Costs	N/A	N/A	N/A	N/A	N/A	N/A
Total Installed Cost ($/kW-DC)	4,020	3,401	3,099	2,035	1,798	1,574

(1) Costs are presented as constant 2018 dollars.
(2) Capital cost of a new systems installed over the projection period.
(3) Cost for 6.6 kW-DC of modules, referenced to the RSS inverter capacity of 6 kW.
(4) Includes engineering, distributable costs, construction management, and start-up.

3.2 Residential – Wind System (RWS)

3.2.1 Equipment and Systems

The system configuration for the residential wind system (RWS) is evaluated in this section of the report.

3.2.2 Technology Specifications

This analysis assumes a typical 10 kW residential wind turbine generator readily available in the commercial marketplace. The wind turbine generator is assumed to be equipped with a locally mounted inverter (if required), a remote monitoring system to provide real-time and historical production data of the facility along with alarm functionality if system or equipment anomalies occur. The RWS is also assumed to be equipped with remote starting and stopping capabilities along with automatic furling functionality if high wind speed events occur. A system of this type is typically unmanned, and monitoring and alarm functionality is assumed to be remote.

OEMs publish and often warranty power curves that have wind speed on the x-axis and electrical production on the y-axis. RWSs will reach their maximum efficiency at or near the top of the power curve, before the power regulation system flattens out the power curve. Power curves (see figure) are typically specified at sea level and the OEMs will de-rate the power curves to adjust for site average annual air density.[44]

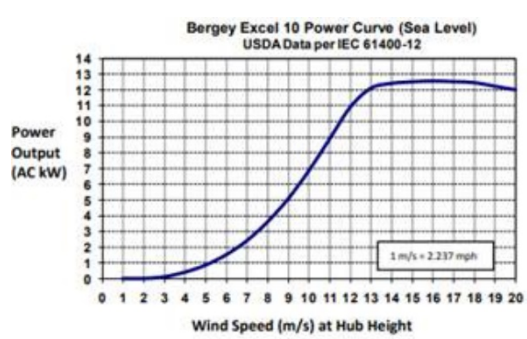

[44] An example power curve from a 10 kW RWS is shown above from this reference source: http://bergey.com/wp-content/uploads/excel-10-owners-manual-2.pdf

No measurable degradation of the RWS performance is expected, if well-maintained. The leading edges of the blades can erode under certain climate conditions, resulting in a compromised airfoil shape. A change in the airfoil shape of the RWS may result in some performance degradation. However, "well-maintained" RWS blades will be inspected annually and repaired to as-new condition as required. The operational lifetime of a well-maintained RWS is expected to be about 20 years.[45]

The market for small wind turbines in the U.S. has continued to decline over the past seven years, with the number of small wind turbine manufacturers both operating and participating in the U.S. market continuing to decline since 2012.[46] Small wind sales recorded in 2018 show 1.5 MW of capacity deployed, representing 2,661 units and $8.2 million in investment. In 2017, there were 1.7 MW, representing 3,269 units and $11.5 million in investment. This continues a downward trend of small wind capacity deployed in recent years, although the number of small wind units has increased, primarily in the less than 1-kW turbine size segment. A total of 2.4 MW of small wind was deployed in 2016 (2,560 units and over $14 million in investment), 4.3 MW in 2015 (1,695 units and a $21 million investment), 3.7 MW in 2014 (1,600 units and a $20 million investment), and 5.6 MW in 2013 (2,700 units and a $36 million investment). There is currently no reason to assume that the small wind market will rebound in the near future, particularly since residential PV technology is more cost effective and generally easier to install on residential rooftops. However, these can be complementary technologies.

3.2.3 Capital Cost Estimate

The Cost Estimate for the RWS facility, with a nominal capacity of 10 kW, is $8,400/kW-AC. The cost estimate for the 10 kW RWS has remained unchanged for the past three years and has led us to project this same constant-dollar cost through the year 2050 for this technology because there is no indication of accelerated market share that would reduce costs per economies of manufacturing scale. The cost estimate for the 10 kW RWS assumes having a small site near the end use (rural area). The RWS needs a residential backyard site to accept underground utilities such as electric and communications controls. A small wind turbine generator manufacturer provided an estimate for the RWS equipment price, and the manufacturer stated that this price should be used for budgetary purposes only. The base cost estimate was verified by comparing with a small database of similar RWSs. Peripheral electrical equipment necessary to complement the residential power generation has been added to the base Cost Estimate. The base Cost Estimate includes site preparation, foundation structure, equipment, electrical, engineering and design, subcontractor fees, and budget contingency. All estimated costs are expressed in $/kW. All numbers in these estimates are based on prices and wages for the U.S. national average. Although not presented here, another RWS option is available in the 15 kW-AC range with an estimated total installed EPC project cost of about $5,950/kW-AC.

[45] DOE Small Wind Guidebook, http://windexchange.energy.gov
[46] DOE 2018 Distributed Wind Market report, https://www.energy.gov/sites/prod/files/2019/08/f65/2018%20Distributed%20Wind%20Market%20Report.pdf

The capital cost estimate was based on Table 3-7, which summarizes the Cost Estimate categories for the RWS facility.

Table 3-7.
Base Plant Site Capital Cost Estimate for RWS (2018)
Technology: RWS
Nominal Capacity (ISO)(1): 10 kW-AC

Capital Cost Category	($/kW-AC) (2018 $)
Equipment Supply	3,200
Installation – Labor and Materials(2)	5,200
Engineering/Construction Management/Contingency	
Total Installed EPC Project Cost	**8,400**

(1) International Standards Organization (ISO).
(2) Includes engineering, distributable costs, construction management, and start-up.

3.2.4 O&M Cost Estimate

Table 3-8 presents the fixed and variable O&M costs associated with a typical RWS. Fixed O&M costs for an RWS might typically include those costs associated with scheduled and unscheduled maintenance and costs associated with remote monitoring. An RWS typically has no variable O&M costs because the O&M costs are typically fixed O&M costs for insurance, property taxes, site maintenance, legal fees, wind turbine generator warranty, royalties, remote monitoring, and other costs. Site maintenance costs typically include re-tensioning of guy wires, inspections, labor, materials, parts, and consumables. Maintenance costs may be partially offset by warranty coverages from the equipment manufacturer or installer for an initial period of time. Proper machine maintenance limits performance degradation over the turbine's lifetime. The cost range is large because the source data are scattered due to: a) a sample with several different RWS sizes and with several different RWS manufacturers; b) installation quality influences the cost of O&M; c) O&M quality greatly influences the cost of O&M; and d) OEM warranties influences the cost of O&M.

The long-term maintenance costs of RWS varies significantly depending on the quality of the equipment and quality of the installation. The control of maintenance costs benefits from the selection of equipment designed and manufactured by an established company and independently certified wind turbine generator. Furthermore, an installer with a significant track record of similar installations and a regional presence to ensure the efficient dispatch of maintenance technicians is assumed to help control maintenance costs for the lifetime of the RWS.

Table 3-8.
Annual O&M Costs for RWS (10 kW)

Technology	RWS
Fixed O&M	31.5 $/kW per year
Variable O&M	N/A

Fixed O&M ranges from 24 to 39 $/kW per year; average value is assumed. Source is: (1) review of Leidos in-house O&M data records, (2) original equipment manufacturer (OEM) recommendations, (3) cost-based estimating with assumed equipment reliability, and (4) survey of available literature.

3.2.5 Reference Technologies Projections

The following tables present the performance characteristics and cost projections for RWS.

Table 3-9.
Residential Wind Performance and O&M – Reference New Equipment (1)

Year	2012	2015	2018	2020	2030	2040	2050
Output Capacity (kW-AC)	10	10	10	10	10	10	10
Capacity Factor (%)(2)	21	21	21	21	21	21	21
Hours of Operation (hrs)(2)	2,365	2,365	2,365	2,365	2,365	2,365	2,365
Equipment Lifetime(3)	20	20	20	20	20	20	20
Variable O&M Costs ($/kWh)(4)	N/A	N/A	N/A	N/A	N/A	N/A	N/A
Fixed O&M Costs ($/kW/year)(4)	31.50	31.50	31.26	31.13	31.02	30.80	30.57

(1) Cost data represents new system installations covering the projection period.
(2) Capacity factor estimated from Leidos database of RWS projects and multiple sample sites for which wind distribution data to calculate using assumed turbine power curve. The capacity factor is an integration of both power curve and wind resource at the project site. Calculation needs to account for expected hours at which the RWS will operate in low winds, below the rated wind speed. Capacity factor calculated using only hours of operation will not agree with the listed CF value..
(3) See Section 3.2.3 discussion. Assumes recommended equipment manufacturer maintenance schedule is sustained.
(4) No variable O&M for RWS. Fixed O&M costs represented in constant 2018 dollars. Average value of estimated range is presented. Modest decreases in projected fixed O&M assumes enhanced monitoring and maintenance methods.

The O&M costs for RWSs include a significant labor component, and we would expect O&M costs to trend up with time as technical labor costs increase. The increase in labor costs is expected to be offset by incremental improvements in equipment reliability and possible decreases in component costs. With little expectation for considerable market growth, the cost projections currently sustain the current, constant-dollar-based cost.

Table 3-10.
Residential Wind Capital Costs – Reference New Equipment (1)
($/kW)

Year	2015	2018	2020	2030	2040	2050
Equipment	3,200	3,200	3,200	3,200	3,200	3,200
Installation Labor and Materials	5,200	5,200	5,200	5,200	5,200	5,200
Engineering/Construction Management/Contingency (2)	N/A	N/A	N/A	N/A	N/A	N/A
Owners Costs	N/A	N/A	N/A	N/A	N/A	N/A
Total Installed Cost	**8,400**	**8,400**	**8,400**	**8,400**	**8,400**	**8,400**

(1) Costs presented are in constant 2018 dollars. Assumes cost of new system installation across the projection period (not replacement cost).
(2) Includes engineering, distributable costs, construction management, and start-up. Included in installation costs.

3.2.6 Advanced Technologies Projections

Residential-scale distributed wind deployment represents a tiny market share within the total wind market that is dominated by utility-class wind farm installations. With declining growth in the general U.S. small distributed wind market, advanced technology and mass production are not viewed as means for projected price or performance changes in the market segment. General manufacturing and materials improvements for system components are likely drivers for modest changes to predicted equipment lifetime (increased by 5 years by 2040) and real equipment cost reduction of about 6% by 2050 based on engineering judgement.

Table 3-11.
Residential Wind O&M – Advanced New Equipment(1)

Year	2015	2018	2020	2030	2040	2050
Output Capacity (kW-AC)	10	10	10	10	10	10
Capacity Factor (%)(2)	21	21	21	21.2	21.4	21.6
Hours of Operation (hrs)	2,365	2,365	2,365	2,365	2,365	2,365
Equipment Lifetime(3)	20	20	20	20	25	25
Variable O&M Costs ($/kWh)(4)	N/A	N/A	N/A	N/A	N/A	N/A
Fixed O&M Costs ($/kW/year)(4)	31.50	31.50	31.26	31.13	31.02	30.80

(1) Data represents new system installations covering the projection period.
(2) Capacity factor estimated from Leidos database of RWS projects and multiple sample sites for which wind distribution data to calculate using assumed turbine power curve. The capacity factor is an integration of both power curve and wind resource at the project site. Calculation needs to account for expected hours at which the RWS will operate in low winds, below the rated wind speed. Capacity factor calculated using only hours of operation will not agree with the listed CF value.
(3) See Section 3.2.3 discussion. Assumes recommended equipment manufacturer maintenance schedule is sustained.
(4) No variable O&M for RWS. Fixed O&M costs represented in constant 2018 dollars. Average value of estimated range is presented.

Table 3-12 presents Advanced Technology capital costs based on the above discussion and reference case allocation of capital costs.

Table 3-12.
Residential Wind Capital Costs – Advanced New Equipment (1)
($/kW-AC)

Year	2015	2018	2020	2030	2040	2050
Equipment	3,200	3,200	3,200	3,136	3,073	3,000
Installation Labor and Materials	5,200	5,200	5,200	5,200	5,200	5,200
Engineering/Construction Management/Contingency (2)	N/A	N/A	N/A	N/A	N/A	N/A
Owners Costs	N/A	N/A	N/A	N/A	N/A	N/A
Total Installed Cost	**8,400**	**8,400**	**8,400**	**8,336**	**8,273**	**8,200**

(1) Costs presented are in constant 2018 dollars.
(2) Includes engineering, distributable costs, construction management, and start-up. Included in installation costs.

3.3 Residential – Fuel Cell System (RFC)

3.3.1 Equipment and Systems

The Residential Fuel Cell System (RFC) is evaluated in this section of the report.

3.3.2 Technology Specifications

For the analysis, a typical 5 kW-AC RFC, readily available in the commercial marketplace and using PEMFC technology, is evaluated. Japan is the world leader with respect to residential fuel cell adoption with approximately 150,000 active units being Panasonic's PEM-based fuel cells. For CHP applications, Panasonic claims over 97% overall energy efficiency or 87.6% based on hydrogen's higher heating value (HHV). Europe has deployed approximately 10,000 fuel cell micro-CHP systems to-date, with Japanese companies being the fuel cell stack suppliers.[47]

The RFC is assumed to be equipped with a remote monitoring system, whose purpose is to provide real-time and historical production data of the facility along with alarm functionality if system or equipment anomalies occur. The RFC is also assumed to be equipped with remote starting and stopping capabilities along with onboard automatic control functionality, which allow for continuous unmanned operations.

Table 3-13.
Residential Fuel Cell – 5 kW–AC (2018)

Technology: RFC
Nominal Capacity (ISO): 5 kW-AC
Nominal Heat Rate (ISO): 8,000 Btu/kWh-HHV

Life Cycle	2018
Output Capacity (kW-AC)	5.0
Electric Heat Rate, HHV (Btu/kWh)	8,000
Electric Efficiency, HHV (%)	56.0
Fuel Input (MMBtu/hr)	1.525
Thermal Output (MMBtu/hr)	0.33
Total CHP Efficiency (%)	77.3
Power to Thermal Output Ratio	2.63
Net Heat Rate (Btu/kWh)	5,255
Equipment Lifetime (years)	10
Variable O&M Costs ($/kWh)	0.092
Fixed O&M Costs ($/kW per year)	317.60

[47] FuelCellWorks, https://fuelcellsworks.com/news/fcw-exclusive-tokyo-fuel-cell-expo-2019-300000-ene-farms/

3.3.3 Capital Cost Estimate

The Cost Estimate for the facility with a nominal capacity of 5 kW-AC is $9,784/kW-AC (2018 dollars).

The Cost Estimate for the RFC 5 kW is based on pricing for Japanese PEM-based residential systems and assumes having a small site adjacent to the residential end-use. The RFC requires a residential backyard site to accept underground utilities such as water, gas, electric, sewage, drainage, etc. The RFC equipment price was obtained from in-house information gathered from a manufacturer, and it is to be used for budgetary purposes only. Peripheral electrical equipment necessary to complement the residential power plant needs has been added to the estimate. The Cost Estimate includes site preparation, gas line tapping costs, structures, equipment, electrical, distributable cost, engineering and design, and subcontractor fee and budget contingency. All numbers in these estimates are based on prices and wages for the U.S. national average.

Table 3-14 summarizes the Cost Estimate categories for the RFC facility.

Table 3-14.
Base Plant Site Capital Cost Estimate for RFC (2018)

Capital Cost Category	($/kW-AC) (2018 $)
Equipment Supply	7,184
Installation – Labor and Materials	2,600
Engineering, Construction Management, and Contingency (1)	0
Owner's Costs	N/A
Total Installed EPC Project Cost (Owners costs included above)	**9,784**

(1) Includes engineering, distributable costs, construction management, and start-up. Included in installation cost.

3.3.4 O&M Estimate

Table 3-15 presents the fixed and variable O&M costs associated with a typical RFC. O&M costs for an RFC include fixed and variable costs associated with routine scheduled and unscheduled maintenance, and those costs associated with remote monitoring. The major maintenance costs are included with the VOM cost for this technology and are given on an average basis across the kilowatt-hours (kWh) incurred. Typically, significant overhauls on an RFC occur no less frequently than on 16,000 operating hour intervals, and the costs associated with such intervals are primarily related to restacking fees. Projections of stack replacement costs for Tables 3-16 and 3-17 are exclusive of any necessary power electronics (i.e., inverters, converters) change outs, as required. As discussed in Section 2.3.3, integrated inverter power electronics are typically being replaced at the same time as the fuel cell stack (5 to 10 years), which is assumed in this estimate. The cost of a grid tie residential inverter for a 5 kW RFC system may vary, but it is expected to be about $1,500 to $2,000.

Table 3-15. O&M Costs for RFC

Technology	Conventional RFC
Fixed O&M	$100/kW per year
Variable O&M	$0.036/kWh

3.3.5 Reference Technologies Projections

The following tables present the performance characteristics and cost projections for RFC.

Table 3-16.
Residential Fuel Cell Performance and O&M – Reference New Equipment (1)

Year	2015	2018	2020	2030	2040	2050
Output Capacity (kW-AC)	5	5	5	5	5	5
Capacity Factor (%)	93	93	93	93	93	93
Hours of Operation (hrs)	8,147	8,147	8,147	8,147	8,147	8,147
Electric Heat Rate, HHV (Btu/kWh)(2)	8,533	8,000	7,952	7,794	7,639	7,487
Electric Efficiency, HHV (%)	40.0	42.7	42.9	43.8	44.7	45.6
Fuel Input (MMBtu/hr)	0.043	0.040	0.040	0.039	0.038	0.037
Thermal Output (MMBtu/hr)	0.018	0.017	0.017	0.017	0.016	0.016
Total CHP Efficiency (%)	82.5	85.2	85.5	86.3	87.2	88.1
Power to Thermal Output Ratio	0.94	1.00	1.01	1.03	1.05	1.07
Net Heat Rate (Btu/kWh)	3,996	3,746	3,723	3,649	3,577	3,506
Stack/Inverter Life (years)(3)	10	10	10	10	10	10
Variable O&M Costs ($/kWh)(4)	0.036	0.036	0.036	0.035	0.035	0.034
Fixed O&M Costs ($/kW/year)(4)	92.51	100.00	100.00	100.00	100.00	100.00

(1) Data represents new system installations covering the projection period.
(2) Heat rate improvement is projected to be 2% per 10 years starting after 2020.
(3) Based on current experience with commercial solid oxide fuel cells (SOFC), power electronics are fully integrated and inverter replacement is generally assumed to be coincident with stack replacement. Therefore, the characterization of inverter life and cost is not relevant to fuel cells for purposes of this assessment.
(4) Variable and fixed O&M costs represented in constant 2018 dollars. Exclusive of grid tie residential inverter replacement cost, which is expected to be about $1,500 to $2,000 at a frequency of about every 10 years.

Table 3-17
Residential Fuel Cell Capital Costs – Reference New Equipment (1)
($/kW-AC)

Year	2015	2018	2020	2030	2040	2050
Equipment(2)	7,765	7,184	7,151	7,004	6,863	6,727
Installation Labor and Materials (2) (3)	2,811	2,600	2,588	2,535	2,484	2,435
Engineering/Construction Management/ Contingency (Included above)	0	0	0	0	0	0
Owners Costs	N/A	N/A	N/A	N/A	N/A	N/A
Total Installed Cost	**10,576**	**9,784**	**9,738**	**9,538**	**9,346**	**9,162**

(1) Costs presented are in constant 2018 dollars.
(2) Real cost reduction assumed to follow electrical efficiency improvement projection.
(3) Includes engineering, distributable costs, construction management, and start-up.

3.3.6 Advanced Technologies Projections

Advance fuel cell equipment cost reductions, like all technologies, accompany growth in mass production rates and manufacturing techniques. The Japanese Fuel Cell Association claims that PEMFC units have fallen to a price level that no longer qualifies for subsidy incentives. While the manufacturing of residential and commercial PEMFC systems has been a less mature technology in the United States, Japanese manufacturing has resulted in more than 300,000 installations during the past through mid-2019 as discussed previously. Cost reductions have accompanied the increased production and translated to other parts of Asia (7 MW of fuel cells power 3,167 residential and commercial buildings in South Korea) and Europe (about 10,000 system installations). Durability of residential micro CHP systems has been improved to about 70,000 hours for PEMFC systems.

Fuel cell efficiency projections are based on DOE Fuel Cell Technologies Office Multi-Year Research, Development, and Demonstration Plan, updated as of 2017[48] covering development of 5 kW distributed generation and micro-CHP fuel cell systems operating on natural gas. "R&D activities include developing lower cost, better performing system balance of plant (BOP) components such as air compressors, fuel processors, sensors, and water and heat management systems. The sub-program also supports the development of experimental diagnostics and theoretical models to gain a foundational understanding of reaction mechanisms and to optimize material structures and technology configurations."

The following DOE performance targets are specified:

- **2020:** >45% electrical efficiency (LHV basis) or 40.6% (HHV basis)
  - Operating lifetime 60,000 hours (current status – up to 70,000 hours)
  - CHP energy efficiency 90%
  - Equipment cost of $1,500/kW
  - Degradation with cycling: 0.3%

[48] U.S. DOE, Fuel Cells sub-program in the Fuel Cell Technologies Office, https://www.energy.gov/sites/prod/files/2017/05/f34/fcto_myrdd_fuel_cells.pdf

- System Availability: 99%

The electrical efficiency projection assumptions for the years beyond 2020 are assumed to be as follows, although the DOE R&D program sets no target beyond 2020:

- 2030: 2.1% incremental increase from 2020 value
- 2040: 3% incremental increase from 2030 value
- 2050: 2% incremental increase from 2040 value

Table 3-18.
Residential Fuel Cell O&M – Advanced New Equipment(1)

Year	2015	2018	2020	2030	2040	2050
Output Capacity (kW-AC)	5	5	5	5	5	5
Capacity Factor (%)	93	93	93	93	93	93
Hours of Operation (hrs)	8,147	8,147	8,147	8,147	8,147	8,147
Electric Heat Rate, HHV (Btu/kWh)	8,533	8,000	7,952	7,419	7,110	6,826
Electric Efficiency, HHV (%)(2)	40.0	42.7	42.9	45	48	50
Fuel Input (MMBtu/hr)	0.043	0.040	0.040	0.037	0.036	0.034
Thermal Output (MMBtu/hr)	0.018	0.017	0.017	0.016	0.015	0.015
Total CHP Efficiency (%)	82.5	85.2	85.5	88.5	90.5	92.5
Power to Thermal Output Ratio	0.94	1.00	1.01	1.08	1.13	1.18
Net Heat Rate (Btu/kWh)	3,996	3,746	3,723	3,474	3,329	3,196
Stack/Inverter Life (years)(3)	10	10	10	10	10	10
Variable O&M Costs ($/kWh)(4)	0.036	0.036	0.036	0.035	0.034	0.033
Fixed O&M Costs ($/kW/year)(4)	92.51	100.00	100.00	100.00	100.00	100.0

(1) Data represents new system installations covering the projection period.
(2) Heat rate improvement projection described in Section 3.3.6.
(3) Based on current experience with commercial solid oxide fuel cells (SOFC), power electronics are fully integrated and inverter replacement is generally assumed to be coincident with stack replacement. Therefore, the characterization of inverter life and cost is not relevant to fuel cells for purposes of this assessment.
(4) Variable and fixed O&M costs represented in constant 2018 dollars. Exclusive of grid tie residential inverter replacement cost, which is expected to be about $1,500 to $2,000 at a frequency of about every 10 years.

Table 3-19.
Residential Fuel Cell Capital Costs – Advanced New Equipment (1)
($/kW AC)

Year	2015	2018	2020	2030	2040	2050
Equipment (2)	7,765	7,184	7,151	6,817	6,391	6,135
Installation Labor and Materials(2) (3)	2,811	2,600	2,588	2,467	2,213	2,125
Engineering/Construction Management/ Contingency	0	0	0	0	0	0
Owners Costs	N/A	N/A	N/A	N/A	N/A	N/A
Total Installed Cost	**10,576**	**9,784**	**9,738**	**9,284**	**8,704**	**8,260**

(1) Costs presented are in constant 2018 dollars.
(2) Real cost reduction assumed to follow electrical efficiency improvement projection.
(3) Includes engineering, distributable costs, construction management, and start-up.

3.4 Residential – Battery Energy Storage (RBESS)

3.4.1 Equipment and Systems

This section describes the Residential Battery Energy Storage (RBESS) system that we have assumed has an installed capacity of 6 kW-DC. The battery system is assumed to have a round-trip efficiency, inclusive of inverter and cell losses, of 87%. The initial installed energy capacity of the RBESS is assumed to be 12 kWh, equivalent to two hours of storage at continuous discharge at rated capacity.

3.4.2 Technology Specifications

RBESS provides backup power, power quality improvements, and extends the usefulness of distributed renewable self-generation (e.g., solar PV plus battery storage). It also regulates the power supply and smooths the quantity of electricity sold back to the grid from a residential system. For the reference technologies projection, we considered a RBESS mounted near the main electrical distribution enclosure on the interior of the home or mounted on the exterior and not exposed to direct sunlight. Further, we have considered that the RBESS will be installed in conjunction with an RSS installation because current RBESS adoption trends do not indicate significant market penetration when not accompanied by other onsite generation. *Because an RSS is present, it is further assumed the bi-directional inverter is provided as a part of the RSS cost.* The capacity of the RBESS was assumed to increase through year 2050 commensurate with the growth in capacity of the RSS installation. The bi-directional inverter is assumed to possess the control features required to communicate with, and control, the battery cells comprising the RBESS and no additional monitoring equipment is required. The RBESS will be capable of being remotely monitored and can provide real-time and historical production data from the facility along with alarm functionality if system or equipment anomalies occur. A facility of this type is typically unmanned, and monitoring and alarm functionality is assumed to be remote.

Adoption of energy storage for grid-connected applications has increased rapidly in recent years; however, the market is still early in the maturation cycle. As a result, equipment warranty terms and usage restrictions for the battery cells can vary

significantly between vendors. Battery equipment warranties typically address workmanship and materials, but they also include a performance component that seeks to limit the impact of energy storage capacity degradation, which has been previously discussed. A typical battery cell warranty will have a 10-year performance warranty guaranteeing about 60% energy capacity at the end of the term, assuming an average of one full charge and discharge cycle per day. Some warranties contain additional restriction on the average state of charge of the battery cell. With these warranty terms in mind, we have assumed 10 years as the lifetime for the battery cells/modules and 15 years as the lifetime for the string inverters.

For cost projections, we have considered battery cell cost reductions, achieved through manufacturing efficiency and refinements to the currently available battery chemistries, as the main drivers of cost reductions over time. In the reference technologies case, our projection assumes the use of NMC lithium-ion batteries as the basic cell chemistry. The residential market requires There is currently a rapidly expanding manufacturing base of supply that is yielding battery module cost reductions resulting from design and safety improvements, more advanced manufacturing techniques, and economies-of-scale.

The advanced technologies case assumes the introduction of new battery technologies and chemistries that enable further reduction in cost as well as reductions in the rate of energy capacity degradation. Flow battery and solid state storage technologies may be among those technologies that result in better performance and lower costs; however, these technologies are not currently available for residential application. Over time, technological or manufacturing innovations may drive the costs down far enough to enable wider adoption in the marketplace.

3.4.3 Capital Cost Estimate

Table 3-20 summarizes the Cost Estimate categories for the RBESS facility.

Table 3-20.
Base Plant Site Capital Cost Estimate for RBESS (2018)

Technology: RBESS
Nominal Capacity (ISO): 6 kW-DC
Nominal Heat Rate (ISO): N/A

Capital Cost Category	($/kW-DC) (2018$)
Equipment Supply	1,685
Installation – Labor and Materials	1,212
Engineering, Construction Management, and Contingency(1)	669
Owner's Costs	N/A
Total Installed EPC Project Cost (Owners costs included)	**3,566**

(1) Includes engineering, distributable costs, construction management, and start-up.

3.4.4 O&M Cost Estimate

Table 3-21 presents the O&M costs for the RBESS.

Table 3-21.
O&M Costs for RBESS (6 kW-DC)

Technology	RBESS
Fixed O&M	N/A
Variable O&M	$0.0053/kWh

Fixed O&M costs are not estimated because regular preventative maintenance is not a typically observed practice for RBESS. Variable O&M based on actual Leidos project reviews.

3.4.5 Reference Technologies Projections

The following tables present the performance characteristics and cost projections for battery storage.

Table 3-22.
Residential RBESS Performance and O&M – Reference New Equipment (1)

Year	2015	2018	2020	2030	2040	2050
Output Capacity (kW-DC)(2)	5.0	6.0	6.7	8.4	9.1	9.2
Cycles Per Day(3)	1.0	1.0	1.0	1.2	1.5	2.0
Annual Energy Degradation (%)(4)	4.0	4.0	3.9	3.5	3.0	2.5
Battery Cell Life (years)(5)	10	10	10	12	13.5	16
String Inverter Life (years)	15	15	15	15	15	15
Variable O&M Costs ($/kWh)(6)	0.0064	0.0053	0.0047	0.0038	0.0035	0.0035
Fixed O&M Costs ($/kW/year)(6)	N/A	N/A	N/A	N/A	N/A	N/A

(1) Assumes new system installation across the projection period (not replacement cost).
(2) Capacity assumed to increase commensurate with the growth in capacity of the RSS installation
(3) One cycle is considered to be one complete round trip discharge and charge cycle. Increasing cycle capability in later years assumed to accompany technology improvements, which lower degradation and improve performance.
(4) Assumes transition to alternative cell chemistries.
(5) Battery cells typically have a 10-year performance warranty after which time the energy capacity may be insufficient to perform the intended function. Assumes performance warranties will be improved proportional to energy degradation.
(6) Variable and fixed O&M costs represented in constant 2018 dollars. Inverter replacement cost excluded as the RBESS and RSS use the same inverter. Fixed O&M costs are not estimated because regular preventative maintenance is not a typically observed practice for RBESS.

Table 3-23.
Residential RBESS Capital Costs – Reference New Equipment (1)
($/kW-DC)

Year	2015	2018	2020	2030	2040	2050
Equipment (2)	2,967	1,685(3)	1,668	1,600	1,440	1,368
Installation Labor and Materials (3)	1,275	1,212	1,200	1,152	1,037	985
Engineering/Construction Management/ Contingency (4)	803	669	600	478	441	436
Owners Costs	N/A	N/A	N/A	N/A	N/A	N/A
Total Installed Cost	**5,045**	**3,566**	**3,468**	**3,230**	**2,918**	**2,789**

(1) Costs presented are in constant 2018 dollars. Assumes cost of new system installation across the projection period (not replacement cost).
(2) Real cost reduction assumed to be achieved through manufacturing efficiency and refinements to the currently available battery chemistries, as the main drivers of cost reductions over time.
(3) Based on LG Chem RESU pricing for 9.3 kWh system, plus 25% for BOP.
(4) Includes engineering, distributable costs, construction management, and start-up.

The 2018 Lazard[49] report indicates the following points for consideration for lithium-ion battery costs projections from 2018 through 2022:

- Increased variation in magnitude of cost declines going forward
- Battery OEMs reduce proportion of cobalt to mitigate higher cost of raw materials
- Potential volatility from near-term capacity tightness
- Multiple new production lines and price-based competition from new entrants
- Slower cost declines in BOS, EPC, and PCS costs
- Increasing share of total system cost

3.4.6 Advanced Technologies Projections

The advanced battery system is assumed to have a round-trip efficiency, inclusive of inverter and cell losses, of 90% as of 2030. The initial installed energy capacity of the RBESS in 2018 is assumed to be 12 kWh, equivalent to two hours of storage at continuous discharge at rated capacity. The capacity of the RBESS is assumed to increase through year 2050 commensurate with the growth in capacity of the RSS installation as discussed in Section 3.4.2.

The following tables present the performance characteristics and cost projections for advanced RBESS. Advanced battery R&D is assumed to accelerate performance by a decade starting in 2030 compared with the reference case.

[49] "*Lazard's Levelized Cost of Storage Analysis—Version 4.0*" https://www.lazard.com/media/450774/lazards-levelized-cost-of-storage-version-40-vfinal.pdf

Table 3-24.
Residential RBESS Performance and O&M – Advanced New Equipment (1) (2)

Year	2015	2018	2020	2030	2040	2050
Output Capacity (kW-DC)	5.0	6.0	6.7	9.8	11.0	12.6
Cycles Per Day (2)	1.0	1.0	1.0	1.5	2.0	2.5
Annual Energy Degradation (%)(3)	4.0	4.0	3.9	3.0	2.5	2.0
Battery Cell Life (years) (4)	10.0	10.0	10.0	13.5	16.0	20
String Inverter Life (years)	15	15	15	15	15	20
Variable O&M Costs ($/kWh)	0.0064	0.0053	0.0047	0.0032	0.0028	0.0025
Fixed O&M Costs ($/kW/year)	N/A	N/A	N/A	N/A	N/A	N/A

(1) Assumes new system installation across the projection period (not replacement cost).
(2) One cycle is considered to be one complete round trip discharge and charge cycle. Increasing cycle capability in later years assumed to accompany technology improvements which lower degradation and improve performance.
(3) Assumes introduction of significant cell chemistry changes, availability of flow, solid state, and other technologies.
(4) Battery cells typically have a 10-year performance warranty after which time the energy capacity may be insufficient to perform the intended function. Assumes performance warranties will be improved to 20 years in 2050.

Table 3-25.
Residential RBESS Capital Costs – Advanced Equipment (1)
($/kW-DC)

Year	2015	2018	2020	2030	2040	2050
Equipment(2)	2,967	1,685(3)	1,668	1,440	1,368	1,300
Installation Labor and Materials (3)	1,275	1,212	1,200	1,037	985	888
Engineering/Construction Management/ Contingency (4)	803	669	600	441	436	318
Owners Costs	N/A	N/A	N/A	N/A	N/A	N/A
Total Installed Cost	**5,045**	**3,566**	**3,468**	**2,918**	**2,789**	**2,506**

(1) Costs presented are in constant 2018 dollars. Assumes cost of new system installation across the projection period (not replacement cost).
(2) Real cost reduction assumed to follow electrical efficiency.
(3) Based on LG CHem RESU pricing of 7,000 for 9.3 kWh system, plus 25% for BOP.
(4) Includes engineering, distributable costs, construction management, and start-up.

Section 4
COMMERCIAL

4.1 Commercial – Small Solar Photovoltaic System (CSS)

4.1.1 Equipment and Systems

This section describes the Commercial Small Solar PV system (CSS), for which we have assumed an installed PV module capacity of 38 kW-DC in the year 2018. This capacity is baselined to the 2017 capacity and efficiency of 36 kW-DC and 17% with a capacity increase based on an efficiency increase to 18.5% in the year 2018, with the system module area remaining constant. The assumed system has a DC to AC capacity of 1.3, which is within the range typically seen for commercial rooftop installations. Unless otherwise noted, *kW-DC* refers to DC capacity and *kW* refers to AC capacity.

4.1.2 Technology Specifications

For this analysis, a ballasted, rooftop mounted, fixed-tilt PV array using polycrystalline panels readily available in the commercial marketplace was considered. The array is assumed to be equipped with string level inverters and a remote monitoring system to provide real-time and historical production data of the facility along with alarm functionality if system or equipment anomalies occur. A facility of this type is typically unmanned, and monitoring and alarm functionality is assumed to be remote.

Photovoltaic modules are generally designed to last more than 25 years. Most manufacturers back their modules with both performance and workmanship warranties. Standard PV modules typically have a materials and workmanship warranty of at least 10 years. The performance warranty generally includes a 25-year annual capacity degradation limit and, depending on the module technology, may include an additional first-year capacity degradation. The warrantied degradation limits vary according to technology and manufacturer. For crystalline silicon technology warranties, the warranty generally bounds the 25-year capacity degradation to between 0.4% and 0.6%. String inverters typically have a 10-year warranty, with extensions to cover 20 years total. With these warranty terms in mind, we have assumed 25 years as the lifetime for the PV modules with the warrantied lifetime transitioning to 30 years by the year 2030. For the string inverters, we have assumed 15 years as the warrantied lifetime. Certain micro-inverters and DC optimizers are available with 25-year warranties.

For cost projections, we have considered module efficiency as the main driver of cost reductions over time. In the reference technologies case, the first years (2012, 2015, and 2018) of our projection assume the use of primarily p-type crystalline silicon, with a transition to modules with performance enhancing characteristics, such as split-cell n-type mono-crystalline silicon cells, in the years from 2020 to 2025. The switch to n-type silicon allows for higher efficiencies and a lower degradation rate in the first year of operation from the elimination/mitigation of LID. Silicon PV modules using n-type monocrystalline split cells are more common in today's solar market in higher performing modules. With time and scale, this technology may see wider adoption. The

advanced technologies case assumes a significant adoption of n-type silicon modules during the next year to dramatically reduce first-year degradation losses associated with phenomena such as LID.

The advanced technologies case assumes a five-year acceleration in module efficiency improvements from the reference technologies case, with a new, higher efficiency PV crystalline silicon module technology adopted by the solar market in the 2030 timeframe. Likely technology improvements include heterojunction cells, enhanced passivated emitters, and module innovations that will increase the CTM power ratio to greater than one.[50] The CTM power ratio is the sum of the powers of all the individual cells in a module divided by the module power and is typically less than 100%. By the simultaneous exploitation of module optics and loss minimization, the typical CTM ratio will soon exceed 100%. Generally, to be adopted, the new technology innovations should have both higher efficiency and lower manufacturing costs. The advanced technologies case also assumes that by 2040, the solar market is adopting higher performance modules with cells that exceed the 33% Shockley–Queisser efficiency limit by exploiting innovation such as alternative materials (e.g. perovskite), tandem cells, and carrier multiplication.[51]

4.1.3 Capital Cost Estimate

The cost estimate for the CSS with a nominal capacity of 38 kW-DC is $2,799 kW-DC (2018 dollars).

The cost estimate for the 38 kW-DC CSS assumes being installed on commercial building roofs, that can provide the roof orientation to satisfy maximum efficiency of solar irradiancy, usually having a footprint similar to the roof surface area structure. The Cost Estimate is based on in-house numbers from actual quotations for work already installed. Peripheral electrical equipment necessary to complement the intermittent power plant needs has been added to the estimate. The Cost Estimate includes site preparation, structures, equipment, electrical, distributable cost, engineering and design, and subcontractor fee and budget contingency.

Table 4-1 summarizes the Cost Estimate categories for the CSS facility.

[50] Clean Technica: *"How Efficient will Solar PV Be in the Future? 10-Year Predictions for the Industry"*: https://cleantechnica.com/2017/08/15/efficient-will-solar-pv-future-10-year-predictions-industry/

[51] PV Magazine: *"Solar panel theoretical efficiency limit increases by 33%"*. https://www.pv-magazine.com/2018/10/17/solar-panel-theoretical-efficiency-limit-increases-by-33/

Table 4-1.
Base Plant Site Capital Cost Estimate for CSS (2018)

Technology: CSS
Nominal Capacity (ISO) (1): 38 kW-DC
Nominal Heat Rate (ISO): N/A

Capital Cost Category	($/kW-DC) (2018 $)
PV Modules (2)	550
Racks	315
Inverters	324
Equipment Supply Subtotal	**1,189**
Installation – Labor and Materials	1,111
Engineering/ Construction Management/Contingency (3)	499
Total Installed EPC Project Cost (Owners Costs included above)	**2,799**

(1) International Standards Organization (ISO).
(2) Capital cost assumes 38 kW-DC PV module capacity referenced to the 30 kW inverter output capacity assumed for the CSS system.
(3) Includes engineering, distributable costs, construction management, and start-up.

4.1.4 O&M Cost Estimate

Table 4-2 presents the O&M costs for the CSS. Fixed O&M costs for a CSS will typically include those costs associated with scheduled and unscheduled maintenance, washings and costs associated with remote monitoring. In some cases, major maintenance reserve funding (MMRF) is included, on a levelized basis, in the fixed costs for a CSS. For our analysis, we have assumed $1.25/kW-year as the amount used for the MMRF mechanism. There are typically no variable O&M costs associated with a CSS, because the costs do not typically vary with CF.

Table 4-2.
O&M Costs for CSS

Technology	CSS
Fixed O&M	$17.00/kW per year
Variable O&M	N/A

Fixed O&M based on actual Leidos project reviews.

4.1.5 Reference Technologies Projections

The following tables present the reference performance characteristics and cost projections for CSS. Our CSS projections assume a system area increase resulting from

increased affordability from 2015 to 2018, and constant system area in subsequent years when all DC capacity increases are the result of increased PV efficiency.

Table 4-3.
Commercial Small PV Performance and O&M – Reference New Equipment (1)

Year	2012	2015	2018	2020	2030	2040	2050
Module Capacity (kW-DC)(2)	32	35	38	42	53	58	62
Capacity Factor (%)	17.0	17.0	17.0	17.0	17.0	17.0	17.0
Hours of Operation (hrs)	1,489	1,489	1,489	1,489	1,489	1,489	1,489
Module Efficiency, (%)	15.0	16.5	18.5	20.3	26.0	28	30
First-Year Degradation (%)(3)	3.0	3.0	3.0	1.9	0.75	0.75	0.75
Subsequent-Year Degradation (%)	0.75	0.75	0.75	0.75	0.5	0.5	0.5
Module Life (years)(4)	25	25	25	25	30	30	30
Inverter Life (years)(5)	15	15	15	20	25	25	25
Variable O&M Costs ($/kWh)(6), (7)	N/A	N/A	N/A	N/A	N/A	N/A	N/A
Fixed O&M Costs ($/kW/year)(7)	18.04	17.51	17.00	15.38	12.20	11.14	10.42

(1) Assumes cost of new system installation across the projection period (not replacement cost).
(2) Assumes physical module size remains the same, with module capacity based on module efficiency relative to 2018.
(3) Assumes transition to n-type silicon wafers from 2020 to 2025 (these wafers will have lower first year degradation).
(4) Modules generally come with a standard 25-year performance warranty but are designed for longer life. Assumes performance warranties will be improved to 30 years starting in 2030.
(5) String inverters generally come with a standard 10-year warranty, with warranty extensions available to 20 years. An inverter lifetime of 15 years has been assumed in 2015, improving to 25 years in 2025.
(6) Commercial inverters have no variable O&M costs; the units are replaced if defective.
(7) Variable and fixed O&M costs represented in constant 2018 dollars.

Table 4-4.
Commercial Small PV Capital Costs – Reference New Equipment (1) (2)
($/kW-DC)

Year	2012	2015	2018	2020	2030	2040	2050
PV Modules for CSS Reference Case (3)	859	758	550	501	391	363	339
Racks	674	347	315	287	224	208	194
Inverters	780	392	324	295	231	214	200
Equipment Supply Subtotal	**2,313**	**1,497**	**1,189**	**1,083**	**846**	**785**	**733**
Installation Labor and Materials	1,643	1,309	1,111	1,012	791	734	685
Engineering/Construction Management/Contingency (4)	592	542	499	455	355	330	308
Owners Costs	N/A	N/A	N/A	N/A	N/A	N/A	N/A
Total Installed Cost	**4,548**	**3,348**	**2,799**	**2,550**	**1,992**	**1,849**	**1,726**

(1) Costs are presented as constant 2018 dollars.
(2) Assumes new system installation across the projection period (not replacement cost).
(3) Cost for 39 to 62 kW-DC modules, referenced to the RSS inverter capacities ranging from 35.5 to 56.5 kW. Module physical size assumed to remain the same, but capacity assumed to increase due to increasing module efficiency.
(4) Module installation assumed to Include engineering, distributable costs, construction management, and start-up.

4.1.6 Advanced Technologies Projections

The following tables present the performance characteristics and cost projections for advanced CSS. Module efficiency is assumed to increase at a faster rate compared with the reference case. In association with the discussion in Section 4.1.2, high concentration, multi-junction solar cells have been demonstrated at laboratory-scale to achieve an efficiency of up to 46.0% with a four-junction inverted metamorphic multijunction (IMM) solar cell.[52] Module efficiencies of up to 38.9% have been achieved with concentrator technology.[53]

Table 4-5.
Commercial Small PV O&M – Advanced New Equipment (1) (2)

Year	2012	2015	2018	2020	2030	2040	2050
Module Capacity (kW-DC)	32	35	39	43	65	74	84
Capacity Factor (%)	17.0	17.0	17.0	17.0	17.0	17.0	17.0
Hours of Operation (hrs)	1,489	1,489	1,489	1,489	1,489	1,489	1,489
Module Efficiency (%) (3)	15.0	16.5	18.5	20.3	30.9	35.0	40.0
First-Year Degradation (%) (3)	3.0	3.0	3.0	1.5	0.75	0.5	0.5
Subsequent-Year Degradation (%)	0.75	0.75	0.75	0.75	0.5	0.5	0.5
Module Life (years)(4)	25	25	25	25	30	30	30
Inverter Life (years) (5)	15	15	15	20	25	25	25
Variable O&M Costs ($/kWh) (6) (7)	N/A	N/A	N/A	N/A	N/A	N/A	N/A
Fixed O&M Costs ($/kW/year) (7)	20.5	18.54	18.00	16.27	10.58	9.39	8.23

(1) For the advanced technologies reference case, module efficiency is assumed to increase at a faster rate compared with the reference case, taking advantage of advanced concentrator and multijunction solar cells technology research.
(2) Assumes new system installations covering the projection period.
(3) Assumes switch to n-type silicon wafers before 2025 (these will have lower first year degradation). Other advanced technologies beyond 2025.
(4) Modules generally come with a standard 25-year performance warranty, but are designed for longer life. Assumes performance warranties will be improved to 30 years starting in 2030.
(5) String inverters generally come with a standard 10-year warranty, with warranty extensions available to 20 years. An inverter lifetime of 15 years has been assumed in 2015, improving to 25 years in 2025.
(6) Residential inverters have minimal O&M costs; the units are replaced if defective.
(7) Variable and fixed O&M costs represented in constant 2018 dollars.

[52] NREL Research, "High-Concentration III-V Multijunction Solar Cells," https://www.nrel.gov/pv/high-concentration-iii-v-multijunction-solar-cells.html, 2019.
[53] Fraunhofer Institute for Solar Energy Systems, ISE, "Photovoltaics Report," March 2019, https://www.ise.fraunhofer.de/content/dam/ise/de/documents/publications/studies/Photovoltaics-Report.pdf

Table 4-6.
Commercial Small PV Capital Costs – Advanced New Equipment (1) (2)
($/kW-DC)

Year	2012	2015	2018	2020	2030	2040	2050
PV Modules for CSS Advanced Case(3)	859	758	550	501	329	291	254
Racks	674	347	315	287	189	167	146
Inverters	780	392	324	295	193	171	150
Equipment Supply Subtotal	**2,313**	**1,497**	**1,189**	**1,083**	**711**	**629**	**550**
Installation Labor and Materials	1,643	1,309	1,111	1,012	665	587	514
Engineering/Construction Management/Contingency (4)	592	542	499	455	299	264	231
Owners Costs	N/A	N/A	N/A	N/A	N/A	N/A	N/A
Total Installed Cost	**4,548**	**3,348**	**2,799**	**2,550**	**1,675**	**1,480**	**1,295**

(1) Costs are presented as constant 2018 dollars.
(2) Assumes new system installation across the projection period (not replacement cost).
(3) Cost for 39 to 84 kW-DC modules, referenced to the RSS inverter capacities ranging from 35.5 to 76 kW. Module physical size assumed to remain the same, but capacity assumed to increase due to increasing module efficiency.
(4) Module installation assumed to Include engineering, distributable costs, construction management, and start-up.

4.2 Commercial – Large Solar Photovoltaic System (CLS)

4.2.1 Equipment and Systems

This section describes the Commercial Large Solar PV system (CLS), for which we have assumed an installed PV module capacity of 1,118 kW-DC in 2018. This capacity is baselined to the 2017 capacity and efficiency of 1,069 kW-DC and 17% with a capacity increase based on an efficiency increase to 18.5% in 2018, with the system module area remaining constant. The assumed system has a DC to AC capacity of 1.3, which is within the range typically seen for commercial rooftop installations.

4.2.2 Technology Specifications

For the analysis, a ballasted, rooftop-mounted, fixed-tilt PV array using polycrystalline panels readily available in the commercial marketplace was considered for the CLS. The array is assumed to be equipped with three-phase string inverters and a remote monitoring system to provide real-time and historical production data of the facility along with alarm functionality if system or equipment anomalies occur. A facility of this type is typically unmanned, and monitoring and alarm functionality is assumed to be remote in nature. Systems of this size may also use central inverters; however, string inverters can be mounted on the rooftop in close proximity to the PV modules. This placement can reduce installation costs compared with a central inverter, which may require a mounting pad next to the building. Other specifications are the same as used for the CSS.

See the discussion in section 4.1.2 for treatment of advanced PV technologies.

4.2.3 Capital Cost Estimate

The Cost Estimate for the CLS with a nominal capacity of 1,118 kW-DC is $2,099/kW-DC.

The Cost Estimate for the CLS assumes modules are installed on commercial structures such as warehouse or large retail store roofs without shadowing from other structures or vegetation with an orientation to satisfy maximum efficiency of solar irradiancy, usually having a footprint similar to the building's roof surface area. The Cost Estimate is based on in-house numbers from actual quotations for work already installed. Peripheral electrical equipment necessary to complement the intermittent power producer needs has been added to the estimate. The Cost Estimate includes site preparation, structures, equipment, electrical, distributable cost, engineering and design, and subcontractor fee and budget contingency. All numbers in these estimates are based on prices and wages for the national average of the United States.

Table 4-7 summarizes the Cost Estimate categories for the CLS.

Table 4-7.
Base Plant Site Capital Cost Estimate for CLS Cost (2018)

Technology: CLS
Nominal Capacity (ISO) (1): 1,118 kW-DC
Nominal Heat Rate (ISO): N/A

Capital Cost Category	($/kW-DC) (2018 $)
PV Modules (2)	534
Racks	216
Inverters	222
Equipment Supply Subtotal	**972**
Installation – Labor and Materials	819
Engineering, Construction Management, and Contingency (3)	308
Total Installed EPC Project Cost (Owners costs included above)	**2,099**

(1) International Standards Organization (ISO).
(2) Capital cost assumes 1,118 kW-DC of PV module capacity, referenced to the 1,016 kW-AC inverter capacity assumed for the CLS system.
(3) Includes engineering, distributable costs, construction management, and start-up.

4.2.4 O&M Cost Estimate

Table 4-8 presents the O&M costs for the CLS system. Fixed O&M costs for an CLS might typically include those costs associated with scheduled and unscheduled maintenance, washings, and remote monitoring. In some cases, MMRF is included, on a levelized basis, in the fixed costs for a CLS. For our analysis, we have assumed $1.25/kW-year as the amount used for the MMRF mechanism. A PV system typically has no variable O&M costs because the costs do not typically vary with CF.

Table 4-8.
O&M Costs for CLS

Technology	CLS
Fixed O&M	$16.00/kW-year
Variable O&M	N/A

Fixed O&M based on actual Leidos project reviews.

4.2.5 Reference Technologies Projections

The following tables present the reference performance characteristics and cost projections for CLS. Our CLS projections assume that the system area remains constant and that all DC capacity increases are the result of increased PV efficiency.

Table 4-9.
Commercial Large PV Performance and O&M – Reference New Equipment (1)

Year	2012	2015	2018	2020	2030	2040	2050
Module Capacity (kW-DC)(2)	943	1,037	1,118	1,227	1,571	1,692	1,813
Capacity Factor (%)	17.0	17.0	17.0	17.0	17.0	17.0	17.0
Hours of Operation (hrs)	1,489	1,489	1,489	1,489	1,489	1,489	1,489
Module Efficiency, (%)	15.0	16.5	18.5	20.3	26.0	28.0	30
First-Year Degradation (%) (3)	3.0	3.0	3.0	1.9	0.75	0.75	0.75
Subsequent-Year Degradation (%)	0.75	0.75	0.75	0.75	0.5	0.5	0.5
Module Life (years)(4)	25	25	25	25	30	30	30
Inverter Life (years)(5)	15	15	15	20	25	25	25
Variable O&M Costs ($/kWh)(6) (7)	N/A	N/A	N/A	N/A	N/A	N/A	N/A
Fixed O&M Costs ($/kW/year)(7)	18.97	17.24	16.00	14.58	11.39	10.57	9.87

(1) Assumes new system installation across the projection period (not replacement of exiting system).
(2) Assumes physical module size remains the same, with module capacity based on module efficiency relative to 2018.
(3) Assumes transition to n-type silicon wafers in 2025 (these wafers will have lower first year degradation).
(4) Modules generally come with a standard 25-year performance warranty but are designed for longer life. Assumes performance warranties will be improved to 30 years starting in 2030.
(5) String inverters generally come with a standard 10-year warranty, with warranty extensions available to 20 years. An inverter lifetime of 15 years has been assumed in 2015, improving to 25 years in 2025.
(6) Commercial modules and inverters have no variable O&M costs; units are replaced if defective.
(7) Variable and fixed O&M represented in constant 2018 dollars.

Table 4-10.
Commercial Large PV Capital Costs – Reference New Equipment (1) (2)
($/kW-DC)

Year	2012	2015	2018	2020	2030	2040	2050
PV Module Cost for CLS Reference Case(3)	884	780	534	487	380	353	329
Racks	546	281	216	197	154	143	133
Inverters	559	281	222	203	158	147	137
Equipment Supply Subtotal	**1,988**	**1,342**	**972**	**887**	**692**	**643**	**599**
Installation Labor and Materials	1,642	1,060	819	746	582	541	505
Engineering/Construction Management/Contingency (4)	692	347	308	281	219	204	190
Owners Costs	N/A	N/A	N/A	N/A	N/A	N/A	N/A
Total Installed Cost	**4,322**	**2,749**	**2,099**	**1,914**	**1,493**	**1,388**	**1,294**

(1) Costs are presented as constant 2018 dollars.
(2) Assumes new system installation across the projection period (not replacement cost).
(3) Cost for 1,118 to 1,813 kW-DC modules, referenced to the RSS inverter capacities ranging from 1,016 to 1,648 kW. Module physical size assumed to remain the same, but capacity assumed to increase due to increasing module efficiency.
(4) Module installation assumed to Include engineering, distributable costs, construction management, and start-up.

4.2.6 Advanced Technologies Projections

The following tables present the performance characteristics and cost projections for advanced CLS. Module efficiency is assumed to increase at a faster rate compared with the reference case. See the discussion in section 4.1.2 for treatment of advanced PV technologies.

Table 4-11.
Commercial Large PV O&M – Advanced New Equipment (1)

Year	2012	2015	2018	2020	2030	2040	2050
Module Capacity (kW-DC)(2)	943	1,038	1,118	1,227	1,867	2,115	2,417
Capacity Factor (%)	17.0	17.0	17.0	17.0	17.0	17.0	17.0
Hours of Operation (hrs)	1,489	1,489	1,489	1,489	1,489	1,489	1,489
Module Efficiency (%)(3)	15.0	17.0	18.5	20.3	30.9	35.0	40.0
First-Year Degradation (%)(3)	3.0	3.0	3.0	1.5	0.75	0.75	0.75
Subsequent-Year Degradation (%)	0.75	0.75	0.75	0.75	0.5	0.5	0.5
Module Life (years)(4)	25	25	25	25	30	30	30
Inverter Life (years)(5)	15	15	20	25	25	25	25
Variable O&M Costs ($/kWh)(6) (7)	N/A	N/A	N/A	N/A	N/A	N/A	N/A
Fixed O&M Costs ($/kW/year)(7)	18.97	17.24	16.00	14.58	9.58	8.46	7.40

(1) Assumes cost of new system installation across the projection period (not replacement cost). For the advanced technologies, reference case module efficiency is assumed to increase at a faster rate compared with the reference case and achieve higher levels.
(2) Assumes physical module size remains the same, with module capacity based on module efficiency relative to 2018.
(3) Assumes transition to n-type silicon wafers in 2025 (these wafers will have lower first year degradation). Transition to other advanced technologies after 2025.
(4) Modules generally come with a standard 25-year performance warranty but are designed for longer life. Assumes performance warranties will be improved to 30 years starting in 2030.
(5) String inverters generally come with a standard 10-year warranty, with warranty extensions available to 20 years. An inverter lifetime of 15 years has been assumed in 2015, improving to 25 years in 2025 and beyond.

(6) Commercial modules and inverters have no variable O&M costs; units are replaced if defective.
(7) Variable and fixed O&M represented in constant 2018 dollars..

Table 4-12.
Commercial Large PV Capital Costs – Advanced New Equipment (1) (2)
($/kW-DC)

Year	2012	2015	2018	2020	2030	2040	2050
PV Module Cost for CLS Advanced Case(3)	884	780	534	487	320	282	247
Racks	546	281	216	197	129	114	100
Inverters	559	281	222	203	133	117	103
Equipment Supply Subtotal	**1,988**	**1,342**	**972**	**887**	**582**	**513**	**450**
Installation Labor and Materials	1,642	1,060	819	746	491	433	379
Engineering/Construction Management/Contingency (2)	692	347	308	281	185	163	143
Owners Costs	N/A	N/A	N/A	N/A	N/A	N/A	N/A
Total Installed Cost	**4,322**	**2,749**	**2,099**	**1,914**	**1,258**	**1,109**	**972**

(1) Costs presented are in constant 2018 dollars.
(2) Assumes new system installation across the projection period (not replacement cost).
(3) Cost for 1,118 to 2,417 kW-DC modules, referenced to the RSS inverter capacities ranging from 1,016 to 2,197 kW. Module physical size assumed to remain the same, but capacity assumed to increase due to increasing module efficiency.
(4) Module installation assumed to Include engineering, distributable costs, construction management, and start-up.

4.3 Commercial – Wind System (CWS)

4.3.1 Equipment and Systems

The system configuration for the Commercial Wind System (CWS) is evaluated in this section of the report.

4.3.2 Technology Specifications

For the analysis, a typical 2 MW wind turbine generator (WTG), readily available in the commercial marketplace, was assumed. Although a 100 kW wind turbine was originally selected for a standard commercial application, the larger size was selected because there currently is not a robust market for WTGs rated between 26 kW and approximately 1.5 MW, and there are currently no independently certified WTGs in this size range available in North America in 2019.[54] The small C&I market segment, which may be interested in this size of WTG, is most likely selecting solar technology as a substitute because the price of solar has fallen and the systems are less complex than WTGs. Projects using commercial-size turbines continue to represent a very small part of the total distributed wind market; a total of 47.4 MW of 2018 distributed wind capacity came from projects using turbines greater than 1 MW (large-scale turbines). Including 1.6 MW from smaller turbines, a total of 49 MW represents $218 million in 2018 investment.[46] In 2018, the average WTG capacity size greater than 100 kW for distributed wind projects was 2.1 MW—almost double the capacity of turbines used in

[54] The 2018 DOE Distributed Wind Market Report identifies a list of certified small wind turbines, but these were all less than 27 kW.

2003. This trend mirrors the increase in turbine capacity size used for all land-based wind projects.[55]

The wind turbine is assumed to be equipped with a locally mounted inverter (if required), a remote monitoring system that provides real-time and historical production data of the facility, and alarm functionality if system or equipment anomalies occur. The CWS is also assumed to be equipped with remote starting and stopping capabilities and automatic furling functionality if high wind speed events occur. A system of this type is typically unmanned, and monitoring and alarm functionality is assumed to be remote. As discussed in Section 3.2.2, OEMs typically publish and often warranty performance based on power curves that specify power output as a function of wind speed. No measurable degradation of the CWS performance is expected, if well-maintained, as discussed previously in Section 3.2.2. The operational lifetime of a well-maintained CWS is expected to be 20 to 25 years based on utility-scale experience.

Utility scale wind farms can approach 50% capacity factors, but these are projects with machines incorporating: (1) 100+ meter diameter rotors; (2) 100 meter towers; (3) meteorologists and climate scientists micro-siting each WTG; and (4) sites selected based on the wind resource. The CWS machine represented in this section uses capacity factors from the Leidos database of CWS projects to estimate a typical capacity factor. Different sample sites for which wind distribution data is available was used to calculate the capacity factors using the manufacturer-specified power curve. The capacity factor is an integration of both power curve and wind resource at a project site, thus differing from site to site.

4.3.3 Capital Cost Estimate

The base Cost Estimate for the CWS with a nominal capacity of 2 MW is $2,930/kW-AC. The Cost Estimate for the CWS 2 MW wind turbine assumes having a site adjacent to the end use (rural area). The Cost Estimate requires a site able to accept underground utilities such as electric and communications controls. The CWS equipment cost was projected from a database of commercial and utility-scale wind energy projects. Peripheral electrical equipment necessary to complement the commercial wind turbine power generation needs has been added to the estimate. The Cost Estimate includes site preparation, foundation structure, equipment, electrical, distributable cost, engineering and design, and subcontractor fee and budget contingency. All estimated costs are expressed in $/kW. All numbers in these estimates are based on prices and wages for the U.S. national average.

Table 4-13 summarizes the Cost Estimate categories for the CWS facility.

[55] EERE. *2018 Wind Technologies Market Report*. U.S. Department of Energy. DOE/GO-102019-5191. https://www.energy.gov/sites/prod/files/2019/08/f65/2018%20Wind%20Technologies%20Market%20Report%20FINAL.pdf

Table 4-13.
Base Plant Site Capital Cost Estimate for Commercial Wind System (2018)

Technology: CWS
Nominal Capacity (ISO)(1): 2 MW-AC

Capital Cost Category	($/kW-AC) (2018 $)
Equipment Supply	1,190
Installation – Labor and Materials	1,398
Engineering, Construction Management, and Contingency (2)	150
Owners Costs	192
Total Project EPC	**2,930**

(1) International Standards Organization (ISO).
(2) Includes engineering, distributable costs, construction management, and start-up. (Costs included in Installation – Labor and Materials above.)

4.3.4 O&M Cost Estimate

Table 4-14 presents the O&M costs for a CWS system. For our analysis we have taken into consideration those fixed costs typically associated with a CWS. The CWS O&M cost was projected from a database of commercial and utility-scale wind energy projects. A CWS typically has no variable O&M costs because the O&M costs do not vary with electrical generation. Maintenance costs typically include inspections, labor, cranes, materials, parts, and consumables. Maintenance costs may be partially offset by warranty coverages from the equipment manufacturer or installer for an initial time period.

The long-term maintenance costs of CWS vary depending on the quality of the equipment, quality of the installation, and the proximity to maintenance infrastructure such as large cranes and experienced technical support. The control of maintenance costs benefits from the selection of equipment designed and manufactured by an established company with a track record of similar equipment and an independently certified wind turbine. Furthermore, a maintenance provider with a significant track record of similar installations and a regional presence to ensure the efficient dispatch of equipment and maintenance technicians is expected to help control maintenance costs for the lifetime of the CWS.

Table 4-14.
Annual O&M Costs for CWS system (2 MW)

Technology	CWS
Fixed O&M	$37.5 per kW per year
Variable O&M	N/A

Fixed O&M ranges from 30 to 45 $/kW per year; average value is assumed. Source is (1) review of Leidos in-house O&M data records, (2) original equipment manufacturer (OEM) recommendations, (3) cost-based estimating with assumed equipment reliability, and (4) survey of available literature. This is compatible with NREL data indicating operation and

maintenance costs for all distributed wind systems up to 10 MW are consistent at $30 to $40 per kW per year.[56]

4.3.5 Reference Technologies Projections

The following tables present the performance characteristics and O&M cost projections for a CWS.

Table 4-15.
Commercial Wind Performance and O&M – Reference New Equipment (1)

Year	2012	2015	2018	2020	2030	2040	2050
Output Capacity (MW)	1.5	2.0	2.0	2.0	2.0	2.0	2.0
Capacity Factor (%)(2)	35	40	40	40	40	40	40
Hours of Operation (hrs)(2)	4,380	4,380	4,380	4,380	4,380	4,380	4,380
Equipment Lifetime(3)	20	20	25	25	25	25	25
Variable O&M Costs ($/kWh) (4)	N/A	N/A	N/A	N/A	N/A	N/A	N/A
Fixed O&M Costs ($/kW/year)(4)	38.4	37.5	37.5	37.34	36.4	35.5	34.6

(1) Data addresses new system installations covering the projection period (not replacement of exiting system).
(2) Capacity factor estimated from Leidos database of CWS projects and multiple sample sites for which wind distribution data to calculate using assumed turbine power curve. The capacity factor listed is an integration of both power curve and wind resource at the project site. Calculation needs to account for expected hours at which the CWS will operate in low winds, below the rated wind speed. Capacity factor calculated using only hours of operation will not agree with the listed CF value.
(3) See Section 3.2.3 discussion. Assumes recommended equipment manufacturer maintenance schedule is sustained.
(4) No variable O&M for CWS. Fixed O&M costs represented in constant 2018 dollars. Average value of estimated range is presented. Modest decreases in projected fixed O&M assumes enhanced monitoring and maintenance methods.

Table 4-16
Commercial Wind Capital Costs – Reference New Equipment(1)
($/kW-AC)

Year	2012	2015	2018	2020	2030	2040	2050
Equipment	1,250	1,220	1,190	1,190	1,178	1,166	1,155
Installation Labor and Materials	1,480	1,433	1,398	1,398	1,398	1,398	1,398
Engineering/Construction Management/Contingency(2)	150	150	150	150	150	150	150
Owners Costs	202	197	192	192	190	188	186
Total Installed Cost	**3,082**	**3,000**	**2,930**	**2,930**	**2,916**	**2,902**	**2,889**

(1) Cost data addresses new system installations covering the projection period.
(2) Includes engineering, distributable costs, construction management, and start-up.

[56] NREL (National Renewable Energy Laboratory). 2016. "Distributed Generation Renewable Energy Estimate of Costs." Accessed April 26, 2019. https://www.nrel.gov/analysis/tech-lcoe-re-cost-est.html.

4.3.6 Advanced Technologies Projections

The manufacturing of wind turbines is generally considered a mature field. However, the DOE EERE Program[57] expects that future cost reductions for onshore wind power technologies (ranging from residential to utility level) will likely be based on:

- Plant-level design and management aimed at optimizing production
- Advanced control systems to maximize energy production and reduce structural loads for land-based wind systems
- Improved numerical methods to understand wind resources
- Blade innovations and swept area of rotor
- More reliable drivetrain technologies
- Better scaling to low-wind speed sites

Historical advancement in WTGs have resulted in lower turbine costs and increased electricity generation. While other wind technology advancements, such as design and material improvements, manufacturing efficiencies, advanced controls, rotor and tower concepts continue to advance wind turbine costs and performance, it is taller hub heights and, more recently, much larger rotor diameters that have helped enable more economical deployment of wind systems.[58] However, the commercial-scale technology is not currently projected to see significant advancement for this size of distributed application.

Because the commercial-scale technology is already mature, the Advanced Technology Case assumes only modest 2% savings per decade more than the Reference Technology Case based on the technology advancements described above. Fixed O&M costs are for insurance, property taxes, site maintenance, remote monitoring, various operations contracts, and legal fees, are expected to remain unchanged on a constant dollar basis. Fifty percent of the fixed O&M costs are for the turbine warranty, and the remainder is tied to labor rates, royalties, and other costs. As turbine reliability improves, the warranty costs (and associated O&M costs) are expected to drop modestly but are not projected to be lower than the reference case technology.

[57] DOE Energy Efficiency and Renewable Energy (NREL) Wind Technology Research Center. https://www4.eere.energy.gov/wind/resource_center/resources

[58] EERE. *2018 Wind Technologies Market Report*. U.S. Department of Energy. DOE/GO-102019-5191. https://www.energy.gov/sites/prod/files/2019/08/f65/2018%20Wind%20Technologies%20Market%20Report%20FINAL.pdf

Table 4-17.
Commercial Wind Performance and O&M – Advanced New Equipment(1)

Year	2012	2015	2018	2020	2030	2040	2050
Output Capacity (MW)	1.5	2.0	2.0	2.0	2.0	2.0	2.0
Capacity Factor (%)(2)	35	40	40	40	40.5	41	41.5
Hours of Operation (hrs)(2)	4,380	4,380	4,380	4,380	4,380	4,380	4,380
Equipment Lifetime(3)	20	25	25	25	25	25	25
Variable O&M Costs ($/kWh) (4)	N/A	N/A	N/A	N/A	N/A	N/A	N/A
Fixed O&M Costs ($/kW/year)(4)	38.4	37.5	37.5	37.34	36.4	35.5	34.6

(1) Data addresses new system installation across the projection period (not replacement of exiting system).
(2) Capacity factor estimated from Leidos database of CWS projects and multiple sample sites for which wind distribution data to calculate using assumed turbine power curve. The capacity factor is an integration of both power curve and wind resource at the project site. Calculation needs to account for expected hours at which the CWS will operate in low winds, below the rated wind speed. Capacity factor calculated using only hours of operation will not agree with the listed CF value.
(3) See Section 3.2.3 discussion. Assumes recommended equipment manufacturer maintenance schedule is sustained.
(4) No variable O&M for CWS. Fixed O&M costs represented in constant 2018 dollars. Average value of estimated range is presented. Modest decreases in projected fixed O&M assumes enhanced monitoring and maintenance methods.

Table 4-18 presents Advanced Technology capital costs based on the above discussion and reference case allocation of capital costs.

Table 4-18.
Commercial Wind Capital Costs – Advanced New Equipment(1)
($/kW-AC)

Year	2012	2015	2018	2020	2030	2040	2050
Equipment ($/kW)	1,250	1,220	1,190	1,190	1,166	1,143	1,120
Installation Labor and Materials ($/kW)	1,480	1,433	1,398	1,398	1,398	1,398	1,398
Engineering/Construction Management/Contingency (2)	150	150	150	150	150	150	150
Owners Costs	202	197	192	192	187	183	180
Total Installed Cost ($/kW)	**3,082**	**3,000**	**2,930**	**2,930**	**2,901**	**2,874**	**2,848**

(1) Cost data addresses new system installations covering the projection period.
(2) Includes engineering, distributable costs, construction management, and start-up.

4.4 Commercial Fuel Cell (CFC)

The Commercial Fuel Cell (CFC) System, using solid oxide-type of fuel cells (SOFC), is evaluated in this section of the report. This technology's reported benefits include high electrical efficiency, long-term stability of fuel cell stacks, fuel flexibility, cogeneration flexibility, and low emissions of CO_2, CO, NOx, VOCs. They have been used commercially for stationary power generation (capacities ranging from 100 W to 2 MW) and as auxiliary power units in vehicles. Their high operating temperatures, between 1,000 and 1,800°F, make them very useful for applications with cogeneration heat recovery and combined cycle power generation.

4.4.1 Equipment and Systems

The CFC facility evaluated in this section of the report uses one SOFC unit, with a nominal power output of 250 kW. The CFC units are modular such that multiple units

may be used to achieve a higher total output (e.g., four 250 kW units to meet a 1 MW requirement). There are a significant number of competing companies manufacturing SOFC units. Current examples of commercial-scale stationary fuel cells are shown below:

Manufacturer	Product Name	Type	Output (kW)
Ballard Power Systems[59] (Canada)	ClearGen	PEMFC	500
Bloom Energy (U.S.)[60]	ES5 – FABAAN	SOFC	200
	ES5 – EA2AAN	SOFC	250
	ES5 – YA8AAN	SOFC	300
Doosan (Korea)[61]	PureCell Model 400	PAFC	460(1)
FuelCell Energy (U.S.)[62]	SureSource 1500	MCFC	1,400
	SureSource 3000	MCFC	2,800
	SureSource 4000	MCFC	3,700
Fuji Electric (Japan)[63]	FP-100i	PAFC	100
(1) Reported by Doosan as the rated average power output during first year of operation.			

300 kW

4.4.2 Technology Specifications

For the analysis, a typical 250 kW CFC unit, readily available in the commercial marketplace and using SOFC technology, is selected. The CFC is assumed to be equipped with a remote monitoring system whose purpose is to provide real-time and historical production data of the facility along with alarm functionality if system or equipment anomalies occur. The CFC is also assumed to be equipped with remote starting and stopping capabilities along with onboard automatic control functionality, which allow for continuous unmanned operations. A unit of this type is typically unmanned, and monitoring and alarm functionality is assumed to be remote.

The technology specifications for the CFC are presented in Table 4-19:

[59] ClearGen™ Multi-MW Systems–Ballard–PDF Catalogs|Technical Documentation|Brochure. pdf.directindustry.com.
[60] Bloom Energy Product Datasheets. https://www.bloomenergy.com/sites/default/files/es5-250kw-datasheet-2019.pdf
[61] Doosan PureCell Model 400 Datasheet. http://www.doosanfuelcell.com/download/pdf/catalog/pafc-400kw_us_en.pdf
[62] Fuel Cell Energy Product Specifications. https://www.fuelcellenergy.com/products/
[63] www.fujielectric.com/products

Table 4-19.
Commercial Fuel Cell – 250 kW–AC (2018)

Technology: CFC
Nominal Capacity (ISO): 250 kW-AC
Nominal Heat Rate (ISO): 6,100 Btu/kWh-HHV

Life Cycle	2018
Output Capacity (kW-AC)	250
Electric Heat Rate, HHV (Btu/kWh)	6,100
Electric Efficiency, HHV (%)	56
Fuel Input (MMBtu/hr)	1.525
Thermal Output (MMBtu/hr)	0.33
Total CHP Efficiency (%)	77.3
Power to Thermal Output Ratio	2.63
Net Heat Rate (Btu/kWh)	5,255
Equipment Lifetime (years)	10
Variable O&M Costs ($/kWh)	0.092
Fixed O&M Costs ($/kW per year)	317.60

SOFC technology selection assumes that useable heat is available for CHP application and the CHP performance is representative of this assumption. Alternatively, available heat may be used to maximize electric efficiency, which is more likely with the technology selected.

4.4.3 Capital Cost Estimate

The base Cost Estimate for the CFC facility with a nominal capacity of 250 kW-AC is $5,859/kW (2018 dollars). The Cost Estimate for the CFC 250 kW unit assumes availability of a small site adjacent to the end use. A one-acre site is needed to be able to accept underground utilities such as water, gas, electric, sewage, drainage, etc. The CFC equipment price was obtained from in-house information gathered from a manufacturer, and it is to be used for budgetary purposes only. Peripheral electrical equipment necessary to complement the commercial power plant needs has been added to the estimate. The Cost Estimate includes site preparation, gas line tapping costs, structures, equipment, electrical, distributable cost, engineering and design, and subcontractor fee and budget contingency. All estimated costs are expressed in $/kW. All numbers in these estimates are based on prices and wages for the U.S. national average.

Table 4-20 summarizes the Cost Estimate categories for the CFC facility.

Table 4-20.
Commercial Fuel Cell Capital Costs – Reference New Equipment(1)
($/kW AC)

Capital Cost Category	($/kW) (2018 $)
Equipment Supply	4,074
Installation – Labor and Materials	1,252
Engineering, Construction Management, and Contingency (1)	0
Owners Costs	533
Total Installed EPC Project Cost with Owners Costs	**5,859**

(1) Includes engineering, distributable costs, construction management, and start-up.

4.4.4 O&M Cost Estimate

Table 4-21 presents the O&M costs for the CFC system. Assumptions used in the preparation of Table 4-21 include an assumed CF of 93%, a standard commercially available fuel supply with typical heating values associated with those of pipeline quality natural gas, and overhaul cycles inclusive of those costs related to restacking, which would typically occur on a five-year cycle. Projections of stack replacement costs in Tables 4-21 and 4-22 are inclusive of and in consideration of any necessary power electronics (i.e., inverters, converters) change outs, as required.

Table 4-21.
O&M Costs for CFC

Technology	CFC
Fixed O&M	$317.60/kW per year
Variable O&M	$0.092/kWh

Fixed and Variable O&M source is: (1) review of Leidos in-house O&M data records, (2) original equipment manufacturer (OEM) recommendations, (3) cost-based estimating with assumed equipment reliability, and (4) survey of available literature as presented in Reference Section at the end of the report.

4.4.5 Reference Technologies Projections

Table 4-22.
Commercial Fuel Cell Performance and O&M – Reference New Equipment (1)

Year	2012 (3)	2015	2018	2020	2030	2040	2050
Output Capacity (kW-AC)	200	250	250	250	250	250	250
Capacity Factor (%)	93	93	93	93	93	93	93
Hours of Operation (hrs)	8,147	8,147	8,147	8,147	8,147	8,147	8,147
Electric Heat Rate, HHV (Btu/kWh)(2)	6,249	6,124	6,100	6,063	5,943	5,824	5,709
Electric Efficiency, HHV (%)	54.6	55.7	56.0	56.3	57.4	58.6	59.8
Fuel Input (MMBtu/hr)	1.562	1.531	1.525	1.516	1.486	1.456	1.427
Thermal Output (MMBtu/hr)	0.333	0.326	0.325	0.323	0.317	0.310	0.304
Total CHP Efficiency (%)	75.9	77.0	77.3	77.6	78.7	79.9	81.1
Power to Thermal Output Ratio	2.56	2.61	2.63	2.64	2.69	2.75	2.81
Net Heat Rate (Btu/kWh)	4,584	4,494	4,476	4,449	4,361	4,274	4,189
Stack/Inverter Life (years)(4)	10	10	10	10	10	10	10
Variable O&M Costs ($/kWh)(5)	0.118	0.092	0.092	0.092	0.090	0.088	0.086
Fixed O&M Costs ($/kW/year)(5)	397	317.6	317.60	317.60	317.60	317.60	317.60

(1) Data represents new system installations covering the projection period.
(2) Heat rate improvement is projected to be 2% per 10 years starting after 2020 based on equipment performance trends and engineering judgement.
(3) 200 kW SOFC system was available in 2012.
(4) Based on current experience with commercial solid oxide fuel cells (SOFC), power electronics are fully integrated and inverter replacement is generally assumed to be coincident with stack replacement. Therefore, the characterization of inverter life and cost is not relevant to fuel cells for purposes of this assessment.
(5) Variable and fixed O&M costs represented in constant 2018 dollars.

Table 4-23.
Commercial Fuel Cell Capital Costs – Reference New Equipment (1)
($/kW-AC)

Year	2012	2015	2018	2020	2030	2040	2050
Equipment(2)	5,044	4,404	4,074	4,052	3,975	3,896	3,818
Installation Labor and Materials (3)	1,550	1,353	1,252	1,245	1,221	1,172	1,149
Engineering/Construction Management/ Contingency	N/A	N/A	N/A	N/A	N/A	N/A	N/A
Owners Costs(3)	660	576	533	531	524	516	508
Total Installed Cost	**7,255**	**6,334**	**5,859**	**5,828**	**5,720**	**5,584**	**5,475**

(1) Costs are presented as constant 2018 dollars.
(2) Real cost reduction assumed to follow electrical efficiency.
(3) Includes engineering, distributable costs, construction management, and start-up.

4.4.6 Advanced Technologies Projections

Advance fuel cell equipment cost reductions, like all technologies, accompany growth in mass production rates and manufacturing techniques. SOFC technology has been under development for many decades, resulting in commercial development, and the

technology continues to be the subject of significant R&D to further enhance performance and reduce cost. Recent SOFC technology investment in 2018 by DOE's Office of Fossil Energy include 16 projects to develop SOFC enhancements, including: 1) conceptual design of a MWe-class SOFC power system and complete a techno-economic analysis to demonstrate that the system can meet a cost target of no more than $6,000 per kilowatt electric (kWe) at low-volume production levels; 2) development of advanced electrodes that are inherently more tolerant to chromium and silicon impurities; 4) demonstrate a significant increase in power density in Redox SOFCs using sputtered electron-blocking, buffer, and cathode functional layers. While not necessarily making them more efficient, much of the effort appears focused on increased reliability and lifetime.

Fuel cell efficiency projections are based on DOE Fuel Cell Technologies Office Multi-Year Research, Development, and Demonstration Plan, updated as of November 2017[64] covering 100 kWe to 3 MWe commercial CHP and DG fuel cell systems operating on natural gas. The following performance targets were specified:

- 2020: > 50% efficiency (LHV basis) or > 45.1% (HHV basis)
  - Operating lifetime 80,000 hours
  - CHP energy efficiency 90%;
  - Equipment cost of $1,000/kW
  - System Availability: 99%

The electrical efficiency projection assumptions for advanced SOFC for the years beyond 2020 are conservatively assumed to be as follows, although the DOE R&D program sets no target beyond 2020:

- 2030: 2.1% incremental increase from 2020 value
- 2040: 3% incremental increase from 2030 value
- 2050: 2% incremental increase from 2040 value

[64] DOE Fuel Cell Technologies Office Multi-Year Research, Development, and Demonstration Plan, https://www.energy.gov/sites/prod/files/2017/05/f34/fcto_myrdd_fuel_cells.pdf

Table 4-24.
Commercial Fuel Cell O&M – Advanced New Equipment[1]

Year	2012	2015	2018	2020	2030	2040	2050
Output Capacity (kW)	200[3]	250	250	250	250	250	250
Capacity Factor (%)	93	93	93	93	93	93	93
Hours of Operation (hrs)	8,147	8,147	8,147	8,147	8,147	8,147	8,147
Electric Heat Rate, HHV (Btu/kWh)	6,249	6,124	6,100	6,063	5,824	5,709	5,595
Electric Efficiency, HHV (%)	54.6	55.7	56.0	56.3	58.6	59.8	61
Fuel Input (MMBtu/hr)	1.562	1.531	1.525	1.516	1.456	1.427	1.399
Thermal Output (MMBtu/hr)	0.333	0.326	0.325	0.323	0.310	0.304	0.298
Total CHP Efficiency (%)	75.9	77.0	77.3	77.6	79.9	81.1	82.3
Power to Thermal Output Ratio	2.56	2.61	2.63	2.64	2.75	2.81	2.86
Net Heat Rate (Btu/kWh)	4,584	4,494	4,476	4,449	4,274	4,189	4,106
Stack/Inverter Life (years)[4]	10	10	10	10	15	20	20
Variable O&M Costs ($/kWh)[5]	0.118	0.092	0.092	0.092	0.088	0.086	0.086
Fixed O&M Costs ($/kW/year)[5]	397	317.6	317.60	317.60	317.60	317.6	317.60

(1) Data represents new system installations covering the projection period.
(2) Heat rate improvement is projected based on Section 4.4.6
(3) 200 kW SOFC system was available in 2012.
(4) Based on current experience with commercial solid oxide fuel cells (SOFC), power electronics are fully integrated and inverter replacement is generally assumed to be coincident with stack replacement. Therefore, the characterization of inverter life and cost is not relevant to fuel cells for purposes of this assessment. Since R&D is focused on enhancing durability and stability of SOFC, equipment lifetime is expected to eventually increase to at least 20 years.
(5) Variable and fixed O&M costs represented in constant 2018 dollars.

Table 4-25.
Commercial Fuel Cell Capital Costs – Advanced New Equipment[1]
($/kW-AC)

Year	2012	2015	2018	2020	2030	2040	2050
Equipment[2]	5,044	4,404	4,074	4,052	3,896	3,818	3,742
Installation Labor and Materials[3]	1,550	1,353	1,252	1,245	1,172	1,149	1,126
Engineering/Construction Management/Contingency	N/A	N/A	N/A	N/A	N/A	N/A	N/A
Owners Costs	660	576	533	531	516	508	498
Total Installed Cost	**7,255**	**6,334**	**5,859**	**5,828**	**5,584**	**5,475**	**5,366**

(1) Costs are presented as constant 2018 dollars.
(2) Real cost reduction assumed to follow electrical efficiency.
(3) Includes engineering, distributable costs, construction management, and start-up.

4.5 Commercial – Natural Gas Reciprocating Engine (CNE)

4.5.1 Equipment and Systems

The following describes the Commercial Natural Gas Reciprocating Engine (CNE), which is a nominal 373 kW net power output. This technology is considered very mature technologically and with respect to factory mass production capabilities.

4.5.2 Technology Specifications

The technology specifications for the CNE are presented in Table 4-26:

Table 4-26.
Commercial Natural Gas Reciprocating Engine – 373 kW

Life Cycle	2018
Output Capacity (kW-AC)	373
Electric Heat Rate, HHV (Btu/kWh)	11,667
Electric Efficiency, HHV (%)	29.2
Fuel Input (MMBtu/hr)	4.35
Thermal Output (MMBtu/hr)	2.03
Total CHP Efficiency (%)	75.9
Power to Thermal Output Ratio	0.63
Net Heat Rate (Btu/kWh)	4,857
Equipment Lifetime (years)	30
Variable O&M Costs ($/kWh)	0.019
Fixed O&M Costs ($/kW/year)	28.97

4.5.3 Capital Cost Estimate

The Cost Estimate for the CNE with a nominal capacity of 373 kW-AC is $2,523/kW-AC.

The Cost Estimate for the CNE 373 kW assumes having a small site near the end use. A one-acre site is required to be cleared, leveled, and conditioned to accept underground utilities, such as water, gas, electric, sewage, and drainage, which are found at large facilities as well (all of which may not be needed for this technology to operate). A mid-western diesel generator supplier provided the CNE price as a budgetary quotation for estimating purposes only. Peripheral electrical equipment necessary to complement the commercial power plant needs has been added to the estimate. The Cost Estimate includes site preparation, gas tapping costs, structures, equipment, electrical, distributable cost, engineering and design, and subcontractor fee and budget contingency. All estimated costs are expressed in $/kW. All numbers in these estimates are based on prices and wages for the U.S. national average.

Table 4-27 summarizes the Cost Estimate categories for the CNE facility.

Table 4-27.
Base Plant Site Capital Cost Estimate for CNE (2018)

Technology:	**CNE**
Nominal Capacity (ISO):	**373 kW-AC**
Nominal Heat Rate (ISO):	**10,405 Btu/kWh-HHV**

Capital Cost Category	($/kW-AC) (2018$)
Equipment Supply	946
Installation – Labor and Materials	864
Engineering, Construction Management, and Contingency (1)	592
Owner costs	121
Total EPC Installed Project Cost with Owner's Costs	**2,523**

(1) Includes engineering, distributable costs, construction management, and start-up.

4.5.4 O&M Cost Estimate

In addition to the general items discussed in the section of this report entitled "O&M Cost Estimate," the CNE facility O&M costs includes the major maintenance for the reciprocating engine and associated electric generator, as well as the BOP. These major maintenance costs are included with the VOM costs for this technology and are given on an average basis across the MWh incurred. Typically, significant overhauls on a CNE facility occur at least every six to eight years. Table 4-28 presents the O&M costs for the CNE facility.

Table 4-28.
O&M Costs for CNE – 373 kW

Technology	CNE
Fixed O&M	$28.97/kW per year
Variable O&M	$0.0197/kWh

Fixed and Variable O&M source is: (1) review of Leidos in-house O&M data records, (2) original equipment manufacturer (OEM) recommendations, (3) cost-based estimating with assumed equipment reliability, and (4) survey of available literature as presented in Reference Section at the end of the report.

Variable Costs

Variable O&M costs include minor (20,000 hours to 25,000 hours) and major maintenance (60,000 hours to 100,000 hours) parts and labor. Engines in the 300 kW range are assumed to be rich burn and use an oxidation catalyst that does not require urea for NOx emissions control. Also included in variable O&M costs are routine maintenance consumables such as lubricating oil and filters.

Fixed Costs

Fixed costs for engines are based mainly on labor costs and subcontract costs for maintenance of the engines. Although the actual labor costs for small output engines is lower than the actual labor costs for larger output engines, the fixed costs for the smaller

engines are higher on a dollar-per-kW basis because of the lower kW output of the smaller engines.

4.5.5 Reference Technologies Projections

Table 4-29.
Commercial Natural Gas Reciprocating Engine Performance and O&M – Reference New Equipment (1)

Year	2012	2015	2018	2020	2030	2040	2050
Output Capacity (kW-AC)	373	373	373	373	373	373	373
Capacity Factor (%)	93	93	93	93	93	93	93
Hours of Operation (hrs)	8,147	8,147	8,147	8,147	8,147	8,147	8,147
Electric Heat Rate, HHV (Btu/kWh)	11,753	11,685	11,667	11,656	11,598	11,540	11,482
Electric Efficiency, HHV (%)	29.03	29.2	29.2	29.3	29.4	29.6	29.7
Fuel Input (MMBtu/hr)	4.38	4.36	4.35	4.35	4.33	4.30	4.28
Thermal Output (MMBtu/hr)	2.05	2.04	2.03	2.03	2.02	2.01	2.00
Total CHP Efficiency (%)	75.7	75.9	75.9	76.0	76.1	76.3	76.4
Power to Thermal Output Ratio	0.62	0.63	0.63	0.63	0.63	0.63	0.64
Net Heat Rate (Btu/kWh)	4,892	4,864	4,857	4,852	4,828	4,803	4,779
Equipment Lifetime(2)	30	30	30	30	30	30	30
Variable O&M Costs ($/kWh) (3)	0.0198	0.0197	0.0197	0.0197	0.0196	0.0195	0.0194
Fixed O&M Costs ($/kW/year) (3)	28.97	28.97	28.97	28.97	28.97	28.97	28.97

1) Based on Caterpillar Model G3508. While often used for natural gas lift, gathering, wellhead gas compression, CHP operation is optional.
2) Service life is estimated to be 30 years (on average) by manufacturers, depending on duty cycle and proper maintenance with several minor and major engine overhauls during this operating period as completed per the manufacturer's recommendations..
3) Variable and fixed O&M costs represented in constant 2018 dollars.

Table 4-30.
Commercial Natural Gas Reciprocating Engine Capital Costs – Reference New Equipment(1)
($/kW-AC)

Year	2012	2015	2018	2020	2030	2040	2050
Equipment	953	948	946	943	940	933	930
Installation Labor and Materials	870	866	864	861	858	852	849
Engineering/Construction Management/ Contingency (2)	592	592	592	592	592	592	592
Owners Costs	122	121	121	121	120	119	119
Total Installed Cost	**2,537**	**2,527**	**2,523**	**2,517**	**2,510**	**2,496**	**2,490**

(1) Costs are presented as constant 2018 dollars.
(2) Includes engineering, distributable costs, construction management, and start-up.

4.5.6 Advanced Technologies Projections

Compared with most other technologies discussed in this report, the reciprocating engine technology is considered very mature technology. Some advances continue to be made on these power generators to further enhance performance (e.g., laser ignition, which has been shown to increase efficiency), but R&D is not primarily focused on reducing installation costs. The DOE Advanced Reciprocating Engine System (ARES) program[65] aims to achieve 50% brake thermal efficiency (80+% with CHP), a maximum of 0.1 g/bhp-hr[66] NOx emissions, maintenance cost lower than $0.01/ekW-hr,[67] and a continued cost competitiveness. Two of the three industry partners (Caterpillar and GE Dresser Waukesha) withdrew from the ARES program based on business considerations with regard to distributed energy technologies.

Cost reductions historically accompany the deployment of a technology from one sales volume to a relatively higher sales volume, but millions of reciprocating engines have already been produced during the previous century. The reciprocating engines also compete with the renewable technologies, NGCCs, and other electricity generators in the electricity market, but they do not appear to grow in significant numbers in modeling results because of their costs relative to other technologies. In five simulations for EPRI in 2013, the unit capital costs ($/kW) did not drop from 2015 levels until the year 2045.[68]

Advances in other electricity-generating technologies may also improve the efficiency of reciprocating engines. For example, fifty research projects at DOE NETL address hydrogen turbines. Natural gas turbines and reciprocating engines operating in CHP systems, which meet regulatory emission requirements, could also benefit from the improvements in combined-cycle units. However, their current deployment is more often for peaking or emergency conditions (because of the short start-up times), thus extending the expected payback periods for these units.

Because of the uncertainties associated with a competitive marketplace environment and the general acknowledgment that these technologies are very mature, the advanced technology cases for natural gas turbines and reciprocating engines were not assumed to have lower unit costs ($/kW) than those in the reference cases. Modest efficiency improvements of 2% lower than the reference case value are assumed to account for general improvements.

[65] DOE EERE, 2015. "Advanced Reciprocating Engine System (ARES)." Last accessed at http://www.energy.gov/eere/amo/downloads/advanced-reciprocating-engine-system-ares on April 22, 2015.
[66] Grams per brake horsepower-Hour
[67] Electric kilowatt-hours
[68] Azevedo, I. P. Jaramillo, E. Rubin, and S. Yeh. Modeling Technology Learning for Electricity Supply Technologies. Phase II Report to Electric Power Research Institute. June 2013. Last accessed from http://www.cmu.edu/epp/iecm/rubin/PDF%20files/2013/FINAL%20PHASE%20II%20REPORT%20TO%20EPRI_June%2030.pdf on April 22, 2015.

Table 4-31.
Commercial Natural Gas Reciprocating Engine O&M – Advanced New Equipment

Year	2012	2015	2018	2020	2030	2040	2050
Output Capacity (kW-AC)	373	373	373	373	373	373	373
Capacity Factor (%)	93	93	93	93	93	93	93
Hours of Operation (hrs)	8,147	8,147	8,147	8,147	8,147	8,147	8,147
Electric Heat Rate, HHV (Btu/kWh)	11,753	11,685	11,667	11,656	11,366	11,309	11,253
Electric Efficiency, HHV (%)	29.03	29.2	29.2	29.3	30.0	30.2	30.3
Fuel Input (MMBtu/hr)	4.38	4.36	4.35	4.35	4.24	4.22	4.20
Thermal Output (MMBtu/hr)	2.05	2.04	2.03	2.03	1.98	1.97	1.96
Total CHP Efficiency (%)	75.7	75.9	75.9	76.0	76.7	76.9	77.0
Power to Thermal Output Ratio	0.62	0.63	0.63	0.63	0.64	0.65	0.65
Net Heat Rate (Btu/kWh)	4,892	4,864	4,857	4,852	4,731	4,707	4,684
Equipment Lifetime(1)	30	30	30	30	30	30	30
Variable O&M Costs ($/kWh)2	0.0198	0.0197	0.0197	0.0197	0.0192	0.0191	0.0190
Fixed O&M Costs ($/kW/year)2	28.97	28.97	28.97	28.97	28.97	28.97	28.97

1) Service life is estimated to be 30 years (on average) by manufacturers, depending on duty cycle and proper maintenance with several minor and major engine overhauls during this operating period as completed per the manufacturer's recommendations..
2) Variable and fixed O&M costs represented in constant 2018 dollars.

Table 4-32.
Commercial Natural Gas Reciprocating Engine Capital Costs – Advanced New Equipment (1)
($/kW-AC)

Year	2012	2015	2018	2020	2030	2040	2050
Equipment	953	948	946	943	924	906	888
Installation Labor and Materials	870	866	864	861	858	852	849
Engineering/Construction/Management /Contingency (2)	592	592	592	592	592	592	592
Owners Costs	122	121	121	121	118	116	114
Total Installed Cost	**2,537**	**2,527**	**2,523**	**2,517**	**2,492**	**2,466**	**2,443**

(1) Costs are presented as constant 2018 dollars.
(2) Includes engineering, distributable costs, construction management, and start-up.

4.6 Commercial – Oil Reciprocating Engine (COE)

4.6.1 Equipment and Systems

The plant configuration for the Commercial Oil Reciprocating Engine (COE) system case produces 350 kW of net power. This technology is considered very mature technologically and with respect to mass production.

4.6.2 Technology Specifications

For the analysis, a typical 350 kW packaged diesel reciprocating engine, readily available in the commercial marketplace and fueled by low sulfur diesel fuel, was evaluated. The COE is assumed to be equipped with a remote monitoring system to provide real-time and historical production data of the facility along with alarm functionality if system or equipment anomalies occur. The COE is also assumed to be equipped with remote starting and stopping capabilities along with onboard automatic control functionality, which allow for continuous unmanned operations with periodic inspections to be conducted by O&M personnel and/or subcontracted labor.

The technology specifications for the COE are presented in Table 4-33:

Table 4-33.
Commercial Oil Reciprocating Engine – 350 kW

Life Cycle	2018
Output Capacity (kW)	350
Electric Heat Rate, HHV (Btu/kWh)	10,099
Electric Efficiency, HHV (%)	33.78
Fuel Input (MMBtu/hr)	3.53
Thermal Output (MMBtu/hr)	1.75
Total CHP Efficiency (%)	83.18
Power to Thermal Output Ratio	0.68
Net Heat Rate (Btu/kWh)	3,863
Equipment Lifetime (years)	30
Variable O&M Costs ($/kWh)	0.0191
Fixed O&M Costs ($/kW/year)	26.51

4.6.3 Capital Cost Estimate

The Cost Estimate for the COE system with a nominal capacity of 350 kW-AC is $2,614/kW-AC.

The Cost Estimate for the COE 350 kW assumes having a small site near the end use. A one-acre site is required to be cleared, leveled, and conditioned to accept underground utilities such as water, gas, electric, sewage, and drainage, which are also found at large facilities (all of which may not be needed for this technology to operate). A local diesel generator supplier provided the COE price as a budgetary quotation for estimating purposes only. Peripheral electrical equipment necessary to complement the commercial power plant needs has been added to the estimate.

Included in the estimate are site preparation, a diesel fuel tank, structures, equipment, electrical, distributable cost, engineering and design, and subcontractor fee and budget contingency. All estimated costs are expressed in $/kW. All numbers in these estimates are based on prices and wages for the U.S. national average.

Table 4-34 summarizes the Cost Estimate categories for the COE system.

Table 4-34.
Base Plant Site Capital Cost Estimate for COE (2018)

Technology: COE
Nominal Capacity (ISO): 350 kW-AC
Nominal Heat Rate (ISO): Btu/kWh-HHV

Capital Cost Category	($/kW-AC) (2018 $)
Equipment Supply	923
Installation – Labor and Materials	944
Engineering, Construction Management, and Contingency (1)	623
Owners Costs	124
Total EPC Installed Project Cost with Owner's Costs	**2,614**

(1) Includes engineering, distributable costs, construction management, and start-up.

4.6.4 O&M Cost Estimate

In addition to the general items discussed in the section of this report entitled "O&M Cost Estimate," the COE facility O&M costs includes the major maintenance for the reciprocating engine and associated electric generator, as well as the BOP. These major maintenance costs are included with the VOM costs for this technology and are given on an average basis across the MWh incurred. Typically, significant overhauls on a CNE facility occur at least every six to eight years. Table 4-35 presents the O&M costs for the COE system.

Table 4-35.
O&M Costs for COE

Technology	COE
Fixed O&M	$26.51/kW-year
Variable O&M	$0.019/kWh

Fixed and Variable O&M source is: (1) review of Leidos in-house O&M data records, (2) original equipment manufacturer (OEM) recommendations, (3) cost-based estimating with assumed equipment reliability, and (4) survey of available literature as presented in Reference Section at the end of the report.

Variable Costs

Variable O&M costs include minor (20,000 hours to 25,000 hours) and major maintenance (60,000 hours to 100,000 hours) parts and labor. Engines in the 300 kW range are assumed to be rich burn and use an oxidation catalyst that does not require urea for NOx emissions control. Also included in variable O&M costs are routine maintenance consumables such as lubricating oil and filters.

Fixed Costs

Fixed costs for engines are based mainly on labor costs and subcontract costs for maintenance of the engines. Although the actual labor costs for small output engines is lower than the actual labor costs for larger output engines, the fixed costs for the smaller engines are higher on a dollar-per-kW basis because of the lower kW output of the smaller engines.

4.6.5 Reference Technologies Projections

Table 4-36.
Commercial O&M – Oil Reciprocating Engine – Reference New Equipment (1)

Year	2012	2015	2018	2020	2030	2040	2050
Output Capacity (kW-AC)	350	350	350	350	350	350	350
Capacity Factor (%)	93	93	93	93	93	93	93
Hours of Operation (hrs)	8,147	8,147	8,147	8,147	8,147	8,147	8,147
Electric Heat Rate, HHV (Btu/kWh)	10,377	10,130	10,099	10,079	9,979	9,881	9,831
Electric Efficiency, HHV (%)	32.88	33.68	33.78	33.85	34.19	34.53	34.71
Fuel Input (MMBtu/hr)	3.63	3.55	3.53	3.53	3.49	3.46	3.44
Thermal Output (MMBtu/hr)	1.79	1.75	1.75	1.74	1.73	1.71	1.70
Total CHP Efficiency (%)	82.28	83.08	83.18	83.25	83.59	83.93	84.11
Power to Thermal Output Ratio	0.67	0.68	0.68	0.69	0.69	0.70	0.70
Net Heat Rate (Btu/kWh)	3,969	3,875	3,863	3,855	3,817	3,779	3,761
Equipment Lifetime(2)	30	30	30	30	30	30	30
Variable O&M Costs ($/kWh)(3)	0.0120	0.019	0.019	0.019	0.019	0.019	0.018
Fixed O&M Costs ($/kW/year)(3)	26.51	26.51	26.51	26.51	26.51	26.51	26.51

1) Based on Caterpillar Model C13. Future projections do not necessarily reflect manufacturer's future specifications
2) Service life is estimated to be 30 years (on average) by manufacturers, depending on duty cycle and proper maintenance with several minor and major engine overhauls during this operating period as completed per the manufacturer's recommendations.
3) Variable and fixed O&M costs represented in constant 2018 dollars.

Table 4-37.
Commercial Oil Reciprocating Engine Capital Costs – Reference New Equipment (1)
($/kW-AC)

Year	2012	2015	2018	2020	2030	2040	2050
Equipment	949	928	923	921	912	903	898
Installation Labor and Materials	971	949	944	942	933	923	919
Engineering/Construction Management/Contingency (2)	623	623	623	623	623	623	623
Owners Costs	127	125	124	124	123	121	121
Total Installed Cost	**2,670**	**2,625**	**2,614**	**2,610**	**2,591**	**2,570**	**2,561**

(1) Costs are presented as constant 2018 dollars.
(2) Includes engineering, distributable costs, construction management, and start-up.

4.6.6 Advanced Technologies Projections

See Section 4.5.6 for similar assumptions for the advanced technology.

Table 4-38.
Commercial Oil Reciprocating Engine O&M – Advanced New Equipment

Year	2012	2015	2018	2020	2030	2040	2050
Output Capacity (kW-AC)	350	350	350	350	350	350	350
Capacity Factor (%)	93	93	93	93	93	93	93
Hours of Operation (hrs)	8,147	8,147	8,147	8,147	8,147	8,147	8,147
Electric Heat Rate, HHV (Btu/kWh)	10,377	10,130	10,099	10,079	9,780	9,683	9,635
Electric Efficiency, HHV (%)	32.88	33.68	33.78	33.85	34.90	35.25	35.42
Fuel Input (MMBtu/hr)	3.63	3.55	3.53	3.53	3.42	3.39	3.37
Thermal Output (MMBtu/hr)	1.79	1.75	1.75	1.74	1.69	1.67	1.67
Total CHP Efficiency (%)	82.28	83.08	83.18	83.25	84.29	84.64	84.81
Power to Thermal Output Ratio	0.67	0.68	0.68	0.69	0.71	0.71	0.72
Net Heat Rate (Btu/kWh)	3,969	3,875	3,863	3,855	3,741	3,704	3,685
Equipment Lifetime(2)	30	30	30	30	30	30	30
Variable O&M Costs ($/kWh)(3)	0.0120	0.019	0.019	0.019	0.0184	0.0182	0.0181
Fixed O&M Costs ($/kW/year)(3)	26.51	26.51	26.51	26.51	26.51	26.51	26.51

1) Reference new equipment based on Caterpillar Model C13. Future projections do not necessarily reflect manufacturer's future specifications
2) Service life is estimated to be 30 years (on average) by manufacturers, depending on duty cycle and proper maintenance with several minor and major engine overhauls during this operating period as completed per the manufacturer's recommendations.
3) Variable and fixed O&M costs represented in constant 2018 dollars.

Table 4-39.
Commercial Oil Reciprocating Engine Capital Costs – Advanced New Equipment (1)

Year	2012	2015	2018	2020	2030	2040	2050
Equipment ($/kW)	949	928	923	921	910	891	873
Installation Labor and Materials ($/kW)	971	949	944	942	933	923	919
Engineering/Construction Management/Contingency (1)	623	623	623	623	623	623	623
Owners Costs	127	125	124	124	122	120	117
Total Installed Cost ($/kW)	**2,670**	**2,625**	**2,614**	**2,610**	**2,588**	**2,557**	**2,532**

(1) Costs are presented as constant 2018 dollars.
(2) Includes engineering, distributable costs, construction management, and start-up.

4.7 Commercial – Natural Gas Turbine (CNT)

4.7.1 Equipment and Systems

The Commercial Natural Gas Turbine (CNT) system consists of a natural gas turbine producing 1,210 kW-AC.

4.7.2 Technology Specifications

For the analysis, a typical 1,210 kW packaged gas turbine, readily available in the commercial marketplace and fueled by pipeline quality natural gas, was evaluated. The CNT is assumed to be equipped with a remote monitoring system to provide real-time and historical production data of the facility along with alarm functionality if system or equipment anomalies occur. The CNT is also assumed to be equipped with remote starting and stopping capabilities along with onboard automatic control functionality, which allow for continuous unmanned operations with periodic inspections to be conducted by O&M personnel and/or subcontracted labor.

Gas turbine life expectancy depends upon duty cycle (continuous vs. cyclic duty). This assessment assumes continuous type of service, for which creep, oxidation, and corrosion will be the predominant modes of deterioration over the operating lifetime. Effective maintenance and repair/replacement of various system components, all of which have different lifetimes, will impact overall life expectancy. Generally, heavy-duty industrial gas turbines are overhauled every 25,000 to 50,000 hours, depending on duty cycle, to restore original performance metrics. Overall equipment lifetime is not generally discussed by manufacturers or in the literature and is application-specific. A 20-year lifetime is assumed based on a regular maintenance schedule as recommended by the manufacturer.

The technology specifications for the CNT are presented in Table 4-40:

Table 4-40.
Commercial – Natural Gas Turbine – 1,210 kW

Life Cycle	2018
Output Capacity (kW)	1,210
Electric Heat Rate, HHV (Btu/kWh)	11,550
Electric Efficiency, HHV (%)	29.54
Fuel Input (MMBtu/hr)	13.97
Thermal Output (MMBtu/hr)	6.01
Total CHP Efficiency (%)	72.54
Power to Thermal Output Ratio	0.69
Net Heat Rate (Btu/kWh)	5,342
Equipment Lifetime (years)	30
Variable O&M Costs ($/kWh)	0.0108
Fixed O&M Costs ($/kW/year)	18.03

4.7.3 Capital Cost Estimate

The Cost Estimate for the CNT system with a nominal capacity of 1,210 kW-AC is $2,075/kW-AC.

Table 4-41 summarizes the Cost Estimate categories for the CNT facility.

Table 4-41.
Base Plant Site Capital Cost Estimate for CNT

Technology: CNT
Nominal Capacity (ISO): 1,210 kW-AC
Nominal Heat Rate (ISO): 14,025 Btu/kWh-HHV

Capital Cost Category	($/kW-AC) (2018 $)
Equipment Supply	1,007
Installation – Labor and Materials	335
Engineering, Construction Management, and Contingency (1)	634
Owners Costs	99
Total Installed EPC Project Cost with Owner's Costs	**2,075**

(1) Includes engineering, distributable costs, construction management, and start-up.

4.7.4 O&M Cost Estimate

In addition to the general items discussed in the section of this report entitled "O&M Estimate," the CNT facility O&M costs include provisions for major maintenance on the electric generators, BOP systems, and other auxiliary systems. Table 4-42 presents the O&M costs for the CNT facility. O&M cost assumptions include labor, provisions for the completion of scheduled and unscheduled maintenance, and major maintenance intervals. For the analysis, a CF of 93% was assumed.

Table 4-42.
O&M Costs for CNT 1,210 kW

Technology	CNT
Fixed O&M	$18.03/kW-year
Variable O&M	$0.0108/kWh

Fixed and Variable O&M source is: (1) review of Leidos in-house O&M data records, (2) original equipment manufacturer (OEM) recommendations, (3) cost-based estimating with assumed equipment reliability, and (4) survey of available literature as presented in Reference Section at the end of the report.

4.7.5 Reference Technologies Projections

Table 4-43.
Commercial Natural Gas Turbine O&M – Reference New Equipment (1) (2)

Year	2012	2015	2018	2020	2030	2040	2050
Output Capacity (kW-AC)	1,210	1,210	1,210	1,210	1,210	1,210	1,210
Capacity Factor (%)	93	93	93	93	93	93	93
Hours of Operation (hrs)	8,147	8,147	8,147	8,147	8,147	8,147	8,147
Electric Heat Rate, HHV (Btu/kWh) (2)	11,629	11,561	11,550	11,445	11,218	10,994	10,885
Electric Efficiency, HHV (%)	29.34	29.51	29.54	29.81	30.42	31.03	31.35
Fuel Input (MMBtu/hr)	14.07	13.99	13.97	13.85	13.57	13.30	13.17
Thermal Output (MMBtu/hr)	6.05	6.02	6.01	5.96	5.84	5.72	5.66
Total CHP Efficiency (%)	72.34	72.51	72.54	72.81	73.42	74.03	74.35
Power to Thermal Output Ratio	0.68	0.69	0.69	0.69	0.71	0.72	0.73
Net Heat Rate (Btu/kWh)	5,378	5,347	5,342	5,294	5,188	5,085	5,034
Equipment Lifetime (years)(3)	30	30	30	30	30	30	30
Variable O&M Costs ($/kWh) (3)	0.0109	0.0108	0.0108	0.0107	0.0105	0.0103	0.0102
Fixed O&M Costs ($/kW/year) (4)	18.03	18.03	18.03	18.03	18.03	18.03	18.03

(1) Based on Solar Saturn 20 GT. Future projections do not necessarily reflect manufacturer's future specifications. Use for CHP applications is assumed possible, but the turbine is typically used for power without heat recovery.
(2) Leidos has assumed that the efficiency of natural gas turbines will increase by about 1% every five years based on design improvements.
(3) Service life is estimated to be 30 years (on average) by manufacturers, depending on duty cycle and proper maintenance with several minor and major engine overhauls during this operating period as completed per the manufacturer's recommendations.
(4) Variable and fixed O&M costs represented in constant 2018 dollars.

Table 4-44.
Commercial Natural Gas Turbine Capital Costs – Reference New Equipment (1)
($/kW-AC)

Year	2012	2015	2018	2020	2030	2040	2050
Equipment	1,014	1,008	1,007	998	978	959	949
Installation Labor and Materials	337	335	335	332	325	319	316
Engineering/Construction Management/Contingency (2)	634	634	634	634	634	634	634
Owners Costs	100	99	99	98	96	94	93
Total Installed Cost	**2,085**	**2,076**	**2,075**	**2,062**	**2,033**	**2,006**	**1,992**

(1) Costs are presented as constant 2018 dollars.
(2) Includes engineering, distributable costs, construction management, and start-up.

4.7.6 Advanced Technologies Projections

Natural gas single cycle turbine technologies were significantly developed from the 1950s through the 1990s when new systems were being widely deployed. These developments paved the route for more cost-effective next-generation techniques, such as natural gas combined-cycle (NGCC) systems. As a reference, Lazard cites the

levelized cost of energy (LCOE) from NGCCs to range from $41 to $74 per MWh, but the gas peaking units have LCOEs of $179 to $230 per MWh.[69] NGCC systems carry the benefit of low emissions for NO_X and for CO_2.

Compared with most other technologies discussed in this report, the gas turbine technologies are considered very mature technologies. Cost reductions historically accompany the deployment of a technology from one sales volume to a relatively higher sales volume, but gas turbines have already been produced in high volumes over decades of deployment. The gas turbines also compete with the renewable technologies, NGCCs, and other electricity generators in the electricity market, but they do not appear to grow in significant numbers in modeling results because of their costs relative to other technologies. In five simulations for Electric Power Research Institute (EPRI) in 2013, the unit capital costs ($/kW) for gas turbines did not drop from 2015 levels until the year 2045.[70]

However, significant advances on these technologies continue to be made in the transportation sector. For example, federal contract awards have led to the development of new turbine engines for aircraft that use ceramic membrane composites to achieve turbine operation at higher temperatures than previously possible. These efforts lead to turbines that can operate both in high power and in low fuel usage modes.[71]

Advances in other electricity-generating technologies may also improve the efficiency of gas turbines. For example, fifty research projects at DOE NETL address hydrogen turbines. Natural gas turbines operating in CHP systems that meet regulatory emission requirements could also benefit from the improvements in combined-cycle units. However, the current deployment of natural gas turbines and reciprocating engines is more often for peaking or emergency conditions (because of the short start-up times), thus extending the expected payback periods for these units.

Lazard (2018)[69] cites fuel costs as representing 14% to 22% of the levelized costs for gas peaking units, so future efficiency improvements (e.g., laser ignition) would result in lower levelized fuel costs. However, natural gas fuel costs are not considered directly in this report.

Because of the uncertainties mentioned in the preceding paragraphs in a competitive environment and the general acknowledgement that these technologies are mature, the advanced technology cases for natural gas turbines were not assumed to have lower unit costs ($/kW) than those in the reference cases.

[69] Lazard, 2018. "Lazard's Levelized Cost of Energy Analysis—Version 12.0." November 2018. https://www.lazard.com/media/450784/lazards-levelized-cost-of-energy-version-120-vfinal.pdf

[70] Azevedo, I. P. Jaramillo, E. Rubin, and S. Yeh. *Modeling Technology Learning for Electricity Supply Technologies. Phase II Report to Electric Power Research Institute.* June 2013. http://www.cmu.edu/epp/iecm/rubin/PDF%20files/2013/FINAL%20PHASE%20II%20REPORT%20TO%20EPRI_June%2030.pdf

[71] GE Aviation, 2015. "GE Successfully Tests World's First Rotating Ceramic Matrix Composite Material for Next-Gen Combat Engine." Press Center. February 10, 2015. http://www.geaviation.com/press/military/military_20150210.html.

Table 4-45.
Commercial Natural Gas Turbine O&M — Advanced New Equipment

Year	2012	2015	2018	2020	2030	2040	2050
Output Capacity (kW-AC)	1,210	1,210	1,210	1,210	1,210	1,210	1,210
Capacity Factor (%)	93	93	93	93	93	93	93
Hours of Operation (hrs)	8,147	8,147	8,147	8,147	8,147	8,147	8,147
Electric Heat Rate, HHV (Btu/kWh) (2)	11,629	11,561	11,550	11,217	10,993	10,775	10,667
Electric Efficiency, HHV (%)	29.34	29.51	29.54	30.42	31.04	31.67	31.99
Fuel Input (MMBtu/hr)	14.07	13.99	13.97	13.57	13.30	13.04	12.91
Thermal Output (MMBtu/hr)	6.05	6.02	6.01	5.84	5.72	5.61	5.55
Total CHP Efficiency (%)	72.34	72.51	72.54	73.42	74.04	74.67	74.99
Power to Thermal Output Ratio	0.68	0.69	0.69	0.71	0.72	0.74	0.74
Net Heat Rate (Btu/kWh)	5,378	5,347	5,342	5,188	5,084	4,983	4,933
Equipment Lifetime (years)(3)	30	30	30	30	30	30	30
Variable O&M Costs ($/kWh) (3)	0.0109	0.0108	0.0108	0.0105	0.0103	0.0101	0.0100
Fixed O&M Costs ($/kW/year) (4)	18.03	18.03	18.03	18.03	18.03	18.03	18.03

(1) Based on Solar Saturn 20 GT.
(2) Leidos has assumed that the efficiency of natural gas turbines will increase by an additional 1% every five years based on advanced design improvements.
(3) Service life is estimated to be 30 years (on average) by manufacturers, depending on duty cycle and proper maintenance with several minor and major engine overhauls during this operating period as completed per the manufacturer's recommendations.
(4) Variable and fixed O&M costs represented in constant 2018 dollars.

Table 4-46.
Commercial Capital Costs – Natural Gas Turbine – Advanced New Equipment (1)

Year	2012	2015	2018	2020	2030	2040	2050
Equipment ($/kW-AC)	1,014	1,008	1,007	998	958	940	930
Installation Labor and Materials ($/kW)	337	335	335	332	319	313	310
Engineering/Construction Management/Contingency (2)	634	634	634	634	634	634	634
Owners Costs	100	99	99	98	94	92	91
Total Installed Cost ($/kW)	**2,085**	**2,076**	**2,075**	**2,062**	**2,005**	**1,979**	**1,965**

(1) Costs are presented as constant 2018 dollars.
(2) Includes engineering, distributable costs, construction management, and start-up.

4.8 Commercial – Natural Gas Microturbine (CNM)

4.8.1 Equipment and Systems

The Commercial Natural Gas Microturbine (CNM) is sized at 200 kW-AC.

4.8.2 Technology Specifications

For this analysis, a typical 200 kW packaged gas-fired microturbine, readily available in the commercial marketplace and fueled by pipeline quality natural gas, was evaluated. The CNM is assumed to be equipped with a remote monitoring system to provide real-time and historical production data of the facility along with alarm functionality if

system or equipment anomalies occur. The CNM is also assumed to be equipped with remote starting and stopping capabilities and onboard automatic control functionality, which allow for continuous unmanned operations with periodic inspections to be conducted by O&M personnel and/or subcontracted labor.

As with other combustion turbines, microturbine life expectancy depends upon duty cycle (continuous vs. cyclic duty). This assessment assumes continuous type of service. Effective maintenance and repair/replacement of various system components, all of which have different lifetimes, will impact overall life expectancy. Generally, microturbines see scheduled maintenance for parts inspection and replacement, at least every 8,000 hours, but some as low as 4,000 hours (e.g., liquid fuel pump) and others as long as 20,000 hours (e.g., natural gas injector assemblies) and 40,000 hours for electronic components.[72] Overall equipment lifetime is not generally discussed by manufacturers or in the literature and is application-specific. A 10-year lifetime is assumed based on a regular maintenance schedule as recommended by the manufacturer.

The technology specifications for the CNM are presented in Table 4-47:

Table 4-47.
Commercial Natural Gas Microturbine – 200 kW

Life Cycle	2018
Output Capacity (kW-AC)	200.0
Electric Heat Rate, HHV (Btu/kWh)	11,364
Electric Efficiency, HHV (%)	30.02
Fuel Input (MMBtu/hr)	2.27
Thermal Output (MMBtu/hr)	0.80
Total CHP Efficiency (%)	65.02
Power to Thermal Output Ratio	0.86
Net Heat Rate (Btu/kWh)	6,392
Equipment Lifetime (years)	10
Variable O&M Costs ($/kWh)	0.0161
Fixed O&M Costs ($/kW/year)	30.60

4.8.3 Capital Cost Estimate

The Cost Estimate for the CNM facility with a nominal capacity of 200 kW-AC is $3,348/kW-AC.

The Cost Estimate for the CNM 200 kW assumes having a small site near the end use. A one-acre site is required to be cleared, leveled, and conditioned to accept underground utilities such as water, gas, electric, sewage, and drainage, which are also found at large facilities. The CNM price was obtained from *Gas Turbine World 2019 TW Handbook Volume 34*. The equipment cost for the 200 kW machine was obtained from pricing of a 200 kW microturbine, plus freight delivery to the site. Peripheral electrical equipment

[72] Capstone Service Schedule for C65. Capstone Turbine Corporation. www.capstoneturbine.com. June 2015 version.

necessary to complement the peaking power plant needs has been added to the estimate. The cost estimate includes site preparation, gas tapping costs, structures, equipment, electrical, distributable cost, engineering and design, and subcontractor fee and budget contingency. All estimated costs are expressed in $/kW-AC. All numbers in these Cost Estimates are based on prices and wages for the U.S. national average.

Table 4-48 summarizes the Cost Estimate categories for the CNM facility.

Table 4-48.
Base Plant Site Capital Cost Estimate for CNM (2018)

Technology: CNM
Nominal Capacity (ISO): 200 kW-AC
Nominal Heat Rate (ISO): 11,500 Btu/kWh-HHV

Capital Cost Category	($/kW-AC) (2018 $)
Equipment Supply	1,365
Installation – Labor and Materials	1,178
Engineering, Construction Management, and Contingency (1)	645
Owners Costs	160
Total Installed EPC Cost with Owner's Costs	**3,348**

(1) Includes engineering, distributable costs, construction management, and start-up.

4.8.4 O&M Cost Estimate

In addition to the general items discussed in the section of this report entitled "O&M Cost Estimate," the CNM facility O&M costs include the major maintenance for the CT, as well as the BOP, including the associated electric generator and emissions reduction catalysts. These major maintenance costs are included with the VOM cost for this technology and are given on an average basis with an assumed CF of 93%. Table 4-49 presents the O&M costs for the CNM Facility.

Table 4-49.
O&M Costs for CNM

Technology:	CNM
Fixed O&M	$30.60/kW-year
Variable O&M	$0.0161/kWh

Fixed and Variable O&M source is: (1) review of Leidos in-house O&M data records, (2) original equipment manufacturer (OEM) recommendations, (3) cost-based estimating with assumed equipment reliability, and (4) survey of available literature as presented in Reference Section at the end of the report.

4.8.5 Reference Technologies Projections

The following tables present the reference performance characteristics and cost projections for CNM.

Table 4-50.
Commercial Natural Gas Microturbine O&M – Reference New Equipment (1)

Year	2012	2015	2018	2020	2030	2040	2050
Output Capacity (kW-AC)(1)	200	200	200	200	200	200	200
Capacity Factor (%)	93	93	93	93	93	93	93
Hours of Operation (hrs)	8,147	8,147	8,147	8,147	8,147	8,147	8,147
Electric Heat Rate, HHV (Btu/kWh) (2)	11,500	11,433	11,364	11,319	11,093	10,873	10,764
Electric Efficiency, HHV (%)	29.67	29.84	30.02	30.14	30.76	31.38	31.70
Fuel Input (MMBtu/hr)	2.30	2.29	2.27	2.26	2.22	2.17	2.15
Thermal Output (MMBtu/hr)	0.80	0.80	0.80	0.79	0.78	0.76	0.75
Total CHP Efficiency (%)	64.67	64.84	65.02	65.14	65.76	66.38	66.70
Power to Thermal Output Ratio	0.85	0.85	0.86	0.86	0.88	0.90	0.91
Net Heat Rate (Btu/kWh)	6,469	6,431	6,392	6,367	6,240	6,116	6,055
Equipment Lifetime (years)(2)	10	10	10	10	10	10	10
Variable O&M Costs ($/kWh) (3)	0.0163	0.0162	0.0161	0.0161	0.0157	0.0154	0.0153
Fixed O&M Costs ($/kW/year) (3)	30.60	30.60	30.60	30.60	30.60	30.60	30.60

(1) Based on Capstone Model C200S. Future projections do not necessarily reflect manufacture's specifications. Inlet gas pressure assumed to be 75 to 80 psig.
(2) Service life is estimated to be 10 years (on average) by manufacturers, depending on duty cycle and proper maintenance with several minor and at least one major engine overhaul during this operating period as completed per the manufacturer's recommendations.
(3) Variable and fixed O&M costs represented in constant 2018 dollars.

Table 4-51.
Commercial Natural Gas Microturbine Capital Costs – Reference New Equipment (1)
($/kW-AC)

Year	2012	2015	2018	2020	2030	2040	2050
Equipment	1,381	1,373	1,365	1,360	1,332	1,306	1,293
Installation Labor and Materials	1,191	1,185	1,178	1,173	1,150	1,127	1,116
Engineering/Construction Management/Contingency (2)	645	645	645	645	645	645	645
Owners Costs	163	161	160	159	156	153	152
Total Installed Cost	**3,380**	**3364**	**3,348**	**3,337**	**3,283**	**3,231**	**3,206**

(1) Costs are presented as constant 2018 dollars.
(2) Includes engineering, distributable costs, construction management, and start-up.

4.8.6 Advanced Technologies Projections

Partnered with Capstone, the DOE Oak Ridge National Laboratory (ORNL) has been developing microturbines with greater electrical efficiencies. In demonstration trials, a low-pressure spool microturbine achieved 35% LHV electrical efficiency (32% HHV) at 70°F to deliver 278 kW. The second phase of the project (2013–15) aimed to develop a two stage microturbine engine (based the low pressure spool and high pressure spool derived from Capstone's current commercially available engines) to achieve a 42% LHV electrical efficiency using advanced materials at the higher temperatures. This project proved that achieving the 42% net electrical efficiency and 85% total system

efficiency in a CHP application for the designated C370 CHP system is feasible. Before entering the commercial market some remaining technical challenges apparently remain, including durability of the bi-metallic turbine wheel and control system architecture for the high-speed system.[73]

Because a major DOE research focus for microturbines has been on improved electrical and CHP efficiency, and because the electrical efficiencies of current products on the market are higher than the reference case, this study used electrical efficiency ratio as the basis for projecting future costs (per kW basis). Table 4-52 shows the efficiencies discussed in the preceding paragraphs and assigns them to particular future years.

Table 4-52.
Assignment of Electrical Efficiencies to New Microturbine Units for Current and Future Years in Advanced Technology Case

Year	HHV Electrical Efficiency	Basis
2018	30%	Reference case from Table 4-49; Capstone C200S
2030	32%	Low pressure spool rating already achieved by ORNL with existing materials and meeting California Air Resources Board emission standards (<9 ppmvd NOx)
2040	38%	Goal based on DOE R&D; 20-year horizon allows time to develop more cost-competitive high-temperature materials and control systems
2050	40%	Conservative estimate based on DOE R&D; 30-year horizon allows time to develop cost-competitive high-temperature materials and control systems

Table 4-53.
Commercial Natural Gas Microturbine O&M – Advanced New Equipment

Year	2012	2015	2018	2020	2030	2040	2050
Output Capacity (kW-AC)(1)	200	200	200	200	200	200	200
Capacity Factor (%)	93	93	93	93	93	93	93
Hours of Operation (hrs)	8,147	8,147	8,147	8,147	8,147	8,147	8,147
Electric Heat Rate, HHV (Btu/kWh)	11,500	11,433	11,364	11,319	10,654	8,982	8,533
Electric Efficiency, HHV (%)	29.67	29.84	30.02	30.14	32.03	38	40
Fuel Input (MMBtu/hr)	2.30	2.29	2.27	2.26	2.13	1..80	1.71
Thermal Output (MMBtu/hr)	0.80	0.80	0.80	0.79	0.75	0.64	0.60
Total CHP Efficiency (%)	64.67	64.84	65.02	65.14	67.03	73.0	75.0
Power to Thermal Output Ratio	0.85	0.85	0.86	0.86	0.92	1.09	1.14
Net Heat Rate (Btu/kWh)	6,469	6,431	6,392	6,367	5,993	5,054	4,801
Equipment Lifetime (years)(2)	10	10	10	10	10	10	10
Variable O&M Costs ($/kWh) (3)	0.0163	0.0162	0.0161	0.0161	0.0150	0.0130	0.0120
Fixed O&M Costs ($/kW/year) (3)	30.60	30.60	30.60	30.60	30.60	30.60	30.60

(1) Based on reference Capstone Model 200S. Future projections do not necessarily reflect manufacture's specifications.
(2) Service life is estimated to be 10 years (on average) by manufacturers, depending on duty cycle and proper maintenance with several minor and at least one major engine overhaul during this operating period as completed per the manufacturer's recommendations.
(3) Variable and fixed O&M costs represented in constant 2018 dollars.

[73] Capstone Turbine Corporation, *Combined Heat and Power Systems Technology Development and Demonstration 370 kW High Efficiency Microturbine*, DOE Project ID # DE-EE0004258. October 2015.

Table 4-54.
Commercial Natural Gas Microturbine Capital Costs — Advanced New Equipment (1)
($/kW-AC)

Year	2012	2015	2018	2020	2030	2040	2050
Equipment(1)	1,381	1,373	1,365	1,360	1,279	1,078	1,025
Installation Labor and Materials	1,191	1,185	1,178	1,173	1,104	931	884
Engineering/Construction Management/Contingency(2)	645	645	645	645	645	645	645
Owners Cost	163	161	160	159	150	127	120
Total Installed Cost	**3,380**	**3364**	**3,348**	**3,337**	**3,178**	**2,781**	**2,674**

(1) Costs are presented in constant 2018 dollars.
(2) Includes engineering, distributable costs, construction management, and start-up.

4.9 Commercial – Battery Energy Storage System (CBESS)

4.9.1 Equipment and Systems

This section describes the Commercial Battery Energy Storage (CBESS) system for which we have assumed an installed capacity of 110 kW-DC. The battery system is assumed to have a *round-trip efficiency*, inclusive of inverter and cell losses, of 87%. The initial installed energy capacity of the CBESS is assumed to be 240 kWh, equal to about two hours of storage at continuous discharge at rated capacity.

4.9.2 Technology Specifications

For the reference technologies projection, we considered an energy storage system interconnected behind the existing host facility meter and in a location close to the point of interconnection. Further, unlike RBESS, this assessment assumes that the CBESS will be *installed independently of any other form of generation* at the host facility. As a result, the complete CBESS will include the battery energy storage cells, bi-directional inverter, electrical interconnection equipment, and associated controls. The CBESS will be capable of being remotely monitored and can provide real-time and historical production data from the facility, along with alarm functionality if system or equipment anomalies occur. A facility of this type is typically unattended, and monitoring and alarm functionality is assumed to be remote.

It has been assumed that the primary use of the CBESS will be for reduction in the peak facility electrical demand. It is common in such systems that the CBESS capacity is selected in such a way as to optimize the economic benefit of the system while minimizing the installation cost; however, it is typical that the CBESS capacity will increase with increasing peak demand. For this reason, it is expected that the installed CBESS capacity will increase at a rate commensurate with the electrical peak demand increases of the associated host facility in years 2020 through 2050. Peak demand is assumed to increase by 0.5% per year over the projection period.

Adoption of energy storage for grid-connected applications has increased rapidly in recent years; however, the market is still early in the maturation cycle. As a result,

equipment warranty terms and usage restrictions for the battery cells can vary significantly between vendors. Battery equipment warranties typically address workmanship and materials, but they also include a performance component that seeks to limit the impact of energy storage capacity degradation, which has been previously discussed. A typical battery cell warranty will have a 10-year performance warranty guaranteeing about 60% energy capacity at the end of the term, assuming an average of one full charge and discharge cycle per day. Some warranties contain additional restrictions on the average state of charge of the battery cell. With these warranty terms in mind, we have assumed 10 years as the lifetime for the battery cells/modules in 2018, with improvement to 16 years by 2050 using the same 60% capacity constraint as the basis of the warranty. String inverters typically have a 10-year warranty, with extensions available to cover 20 years total. For the string inverters, we have assumed 15 years as the warrantied lifetime. Therefore, as battery cells/modules lifetime exceeds that of the inverters in future years, they will need to be replaced to maintain system operation.

For cost projections, we have considered battery cell cost reductions, achieved through manufacturing efficiency and refinements to the currently available battery chemistries, as the main drivers of cost reductions over time. In the reference technologies case, our projection assumes the use of NMC lithium-ion batteries as the basic cell chemistry.

The advanced technologies case assumes the introduction of new battery technologies and chemistries, which enable further reduction in cost as well as reductions in the rate of energy capacity degradation. Flow battery and solid state storage technologies may be among those technologies that result in better performance and lower costs; however, these technologies are not commonly deployed in commercial applications at this time. Over time, technological or manufacturing innovations may drive the costs down far enough to enable wider adoption in the marketplace.

4.9.3 Capital Cost Estimate

Table 4-55.
Base Plant Site Capital Cost Estimate for CBESS Cost (2018)

Technology: CBESS
Nominal Capacity (ISO) : 110 kW-DC
Nominal Heat Rate (ISO): N/A

Capital Cost Category	($/kW-DC) (2018 $)
Equipment Supply	2,158
Installation – Labor and Materials	617
Engineering, Construction Management, and Contingency (1)	341
Owner's Cost	N/A
Total Installed EPC Project Cost (Owner's Costs Included)	**3,116**

(1) Includes engineering, distributable costs, construction management, and start-up.

4.9.4 O&M Cost Estimate

Table 4-56 presents the O&M costs for the CBESS system. The major areas for fixed O&M costs for a BESS include visual inspection, maintaining torque values of

connections, the PCS, the fire detection or protection system, and the thermal management system. Battery modules themselves are maintained by the automated controls and require no additional maintenance unless there is a failure, which the controls will annunciate with an alarm. Variable O&M costs consists of augmentation of the energy storage elements (battery modules) as their capacity degrades. The following tables present the performance characteristics and cost projections for CBESS.

Table 4-56.
O&M Costs for CBESS (110 kW-DC)

Technology	RBESS
Fixed O&M	$350/kW per year
Variable O&M	$0.0059/kWh

Contractually based performance guarantees and other commercial terms will lead to truck rolls/preventative maintenance. FOM here is based on experience with commercial based contracts and operations. Variable O&M cost includes consideration for battery replenishment and inverter replacement.

4.9.5 Reference Technologies Projections

The following tables present the performance characteristics and cost projections for commercial battery storage.

Table 4-57.
Commercial CBESS Performance and O&M – Reference New Equipment (1)

Year	2012	2015	2018	2020	2030	2040	2050
Output Capacity(kW-DC)(2)	110	110	110	111	117	123	129
Cycles Per Day(3)	1.0	1.0	1.0	1.0	1.2	1.5	2.0
Annual Energy Degradation(4)	4.0	4.0	4.0	3.9	3.5	3.0	2.5
Battery Cell Life (years)(5)	10	10	10	10	12	13.5	16
Inverter Life (years)(6)	15	15	15	15	15	15	15
Variable O&M Costs ($/kWh)(7)	0.0059	0.0059	0.0059	0.0059	0.0056	0.0053	0.0051
Fixed O&M Costs ($/kW-year)(7)	350	350	350	347	329	313	300

(1) Assumes new system installation across the projection period (not replacement cost).
(2) Output capacity growth assumes 0.5% growth in addressable electrical load per year after 2018.
(3) One cycle is considered to be one complete round trip discharge and charge cycle. Increasing cycle capability in later years assumed to accompany technology improvements, which lower degradation and improve performance.
(4) Assumes transition to alternative cell chemistries.
(5) Battery cells typically have a 10-year performance warranty after which time the energy capacity may be insufficient to perform the intended function. Assumes performance warranties will be improved to 16 years in 2050 based on degradation improvement.
(6) String inverters typically have a 10 year warranty, with extensions available to cover 20 years total. For the string inverters, we have assumed 15 years as the warrantied lifetime.
(7) Variable and fixed O&M costs represented in constant 2018 dollars. Contractually based performance guarantees and other commercial terms t will lead to truck rolls / preventative maintenance. Fixed O&M is based on experience with commercial based contracts and operations. Variable O&M cost includes consideration for battery replenishment and inverter replacement.

Table 4-58.
Commercial CBESS Capital Costs – Reference New Equipment (1)
($/kW-DC)

Year	2012	2015	2018	2020	2030	2040	2050
Equipment(2)	11,251	3,800	2,158	2,137	2,050	1,845	1,753
Installation Labor and Materials	695	655	617	611	581	556	526
Engineering/Construction Management/ Contingency(3)	341	341	341	338	321	307	291
Owners Costs(4)	0	0	0	0	0	0	0
Total Installed Cost	**12,287**	**4,796**	**3,116**	**3,086**	**2,952**	**2,708**	**2,570**

(1) Costs are presented as constant 2018 dollars. Assumes cost of new system installation across the projection period (not replacement cost).
(2) Real cost reduction assumed to be achieved through manufacturing efficiency and refinements to the currently available battery chemistries, as the main drivers of cost reductions over time.
(3) Includes engineering, distributable costs, construction management, and start-up.
(4) Assumed to be included in the equipment cost

4.9.6 Advanced Technologies Projections

Significant battery research and development programs are being conducted worldwide. The U.S. Department of Energy R&D programs have been covering advanced battery manufacturing, advanced membranes for next-generation batteries, advanced flow batteries, and new approaches to battery diagnostics.[74] As shown, improvements will likely enhance annual degradation and battery cell life, but impact on cost reduction may not be as significant as conservatively projected in this study.

The following tables present the performance characteristics and cost projections for advanced CBESS. Cycle efficiency is assumed to increase at a faster rate compared with the reference case.

Table 4-59.
Commercial CBESS Performance and O&M – Advanced New Equipment (1) (2)

Year	2012	2015	2018	2020	2030	2040	2050
Output Capacity (kW-DC)	110	110	110	111	117	123	129
Cycles Per Day (2)	1.0	1.0	1.0	1.0	1.5	2.0	2.5
Annual Energy Degradation (3)	4.0	4.0	4.0	3.9	3.0	2.5	2.0
Battery Cell Life (years) (4)	10	10	10	10	13.5	16.0	20
String Inverter Life (years)	15	15	15	15	15	15	20
Variable O&M Costs ($/kWh)	0.0059	0.0059	0.0059	0.0059	0.0057	0.0052	0.0050
Fixed O&M Costs ($/kW-year)	350	350	350	347	329	313	300

(1) Assumes new system installed every 10 years from 2020 through 2050.
(2) One cycle is considered to be one complete round trip discharge and charge cycle. Increasing cycle capability in later years assumed to accompany technology improvements which lower degradation and improve performance.
(3) Assumes introduction of significant cell chemistry changes, availability of flow, solid state, and other technologies.
(4) Battery cells typically have a 10-year performance warranty after which time the energy capacity may be insufficient to perform the intended function. Assumes performance warranties will be improved to 20 years in 2050.

[74] U.S. DOE, Office of Technology Transitions, *Solving Challenges in Energy Storage*, August 2018. Energy.gov/technology transitions

Table 4-60.
Commercial CBESS Capital Costs – Advanced New Equipment (1)
($/kW-DC)

Year	2012	2015	2018	2020	2030	2040	2050
Equipment(2)	11,251	3,800	2,158	2,137	1,845	1,753	1,665
Installation Labor and Materials	695	655	617	611	556	526	500
Engineering/Construction Management/ Contingency (3)	341	341	341	338	321	307	291
Owners Costs(4)	0	0	0	0	0	0	0
Total Installed Cost	**12,287**	**4,796**	**3,116**	**3,085**	**2,722**	**2,586**	**2,456**

(1) Costs are presented as constant 2018 dollars. Assumes cost of new system installation across the projection period (not replacement cost).
(2) Real cost reduction assumed to be achieved through manufacturing efficiency and refinements to the currently available battery chemistries, as the main drivers of cost reductions over time.
(3) Includes engineering, distributable costs, construction management, and start-up.
(4) Assumed to be included in the equipment cost

5.1 Industrial – Natural Gas Reciprocating Engine-1,200 kW (IRE1)

5.1.1 Equipment and Systems

The Industrial Natural Gas Reciprocating Engine facility with 1,200 kW-AC capacity (IRE1) is discussed below. This technology is considered very mature technologically and with respect to mass production.

5.1.2 Technology Specifications

Table 5-1.
Industrial Natural Gas Reciprocating Engine – 1,200 kW-AC

Life Cycle	2018
Output Capacity (kW)	1,200
Electric Heat Rate, HHV (Btu/kWh)	8,713
Electric Efficiency, HHV (%)	39.16
Fuel Input (MMBtu/hr)	10.46
Thermal Output (MMBtu/hr)	4.08
Total CHP Efficiency (%)	78.16
Power to Thermal Output Ratio	1.0
Net Heat Rate (Btu/kWh)	4,466
Equipment Lifetime (years)	30
Variable O&M Costs ($/kWh)	0.0147
Fixed O&M Costs ($/kW/year)	19.29

The IRE1 facility is controlled using a DCS. The DCS provides centralized control of the facility by integrating the control systems provided with the reciprocating engineer and associated electric generator and the control of BOP systems and equipment.

5.1.3 Capital Cost Estimate

The Cost Estimate for the IRE1 Facility with a nominal capacity of 1,200 kW-AC is $2,469/kW-AC.

The Cost Estimate for the IRE1 1,200 kW assumes having a small site adjacent to the end use or transmission line. A two-acre site is assumed to be required to be cleared, leveled, and conditioned to accept underground utilities such as water, gas, electric, sewage, and drainage, which are also found at large facilities. A Midwestern dealer provided the IRE1 retail engine budgetary quotation per Leidos specification. Peripheral electrical equipment necessary to complement the industrial power plant needs has been

added to the estimate; a natural gas storage tank is also included. The Cost Estimate includes site preparation, structures, equipment, electrical, distributable cost, engineering and design, and subcontractor fee and budget contingency. All estimated costs are expressed in $/kW. All numbers in these estimates are based on prices and wages for the U.S. national average.

Table 5-2 summarizes the Cost Estimate categories for the IRE1 Facility.

Table 5-2.
Base Plant site Capital Cost Estimate for IRE1 (2018)

Technology:	**IRE1**
Nominal Capacity (ISO):	**1,200 kW-AC**
Nominal Heat Rate (ISO):	**8,713 Btu/kWh-HHV**

Capital Cost Category	($/kW-AC) (2018 $)
Equipment Supply	1,104
Installation – Labor and Materials	492
Engineering, Construction Management, and Contingency (1)	648
Owners Costs	225
Total Installed EPC Project Cost with Owner's Costs	**2,469**

(1) Includes engineering, distributable costs, construction management, and start-up.

5.1.4 O&M Cost Estimate

In addition to the general items discussed in the section of this report entitled "O&M Cost Estimate," the IRE1 facility O&M costs includes the major maintenance for the reciprocating engine and associated electric generator, as well as the BOP. These major maintenance costs are included with the VOM costs for this technology and are given on an average basis across the MWh incurred. Typically, significant overhauls on a IRE1 facility occur at least every six to eight years. Table 5-3 presents the O&M costs for the IRE1 facility.

Table 5-3.
O&M Costs for IRE1

Technology	IRE1
Fixed O&M	$19.29/kW-year
Variable O&M	$0.0147/kWh

Fixed and Variable O&M source is: (1) review of Leidos in-house O&M data records, (2) original equipment manufacturer (OEM) recommendations, (3) cost-based estimating with assumed equipment reliability, and (4) survey of available literature as presented in Reference Section at the end of the report.

Variable Costs

Variable O&M costs include minor (20,000 hours to 25,000 hours) and major maintenance (60,000 hours to 100,000 hours) parts and labor. For engines 1,000 kW and above (which are assumed to be lean burn technology), add to this 10% of the cost of fuel to cover the cost of urea for the SCR system. Smaller engines (such as in the

300 kW range) are assumed to be rich burn and use an oxidation catalyst that does not require urea. Also included in variable O&M costs are routine maintenance consumables such as lubricating oil and filters.

Fixed Costs

Fixed costs for engines are based mainly on labor costs and subcontract costs for maintenance of the engines. Although the actual labor costs for small output engines is lower than the actual labor costs for larger output engines, the fixed costs for the smaller engines are higher on a dollar-per-kW basis because of the lower kW output of the smaller engines.

5.1.5 Reference Technologies Projections

The IRE1 reference cases projections are presented below in Tables 5-4 and 5-5.

Note that an industrial CHP unit will operate at relatively high capacity factor because in an industrial application the unit will provide both electricity for the application as well as steam/hot water for the industrial process. Units operating in this fashion will need to operate whenever the industrial plant and process are running.

Table 5-4.
1,200 kW Industrial Natural Gas Reciprocating Engine Performance and O&M – Reference New Equipment (1)

Year	2015	2018	2020	2030	2040	2050
Output Capacity (kW-AC)	1,200	1,200	1,200	1,200	1,200	1,200
Capacity Factor (%)	93	93	93	93	93	93
Hours of Operation (hrs)	8,147	8,147	8,147	8,147	8,147	8,147
Electric Heat Rate, HHV (Btu/kWh)	8,727	8,713	8,705	8,661	8,618	8,597
Electric Efficiency, HHV (%)	39.10	39.16	39.20	39.39	39.59	39.69
Fuel Input (MMBtu/hr)	10.47	10.46	10.45	10.39	10.34	10.32
Thermal Output (MMBtu/hr)	4.08	4.08	4.07	4.05	4.03	4.02
Total CHP Efficiency (%)	78.10	78.16	78.20	78.39	78.59	78.69
Power to Thermal Output Ratio	1.00	1.01	1.01	1.01	1.02	1.02
Net Heat Rate (Btu/kWh)	4,477	4,470	4,466	4,443	4,421	4,410
Equipment Lifetime (years)(2)	30	30	30	30	30	30
Variable O&M Costs ($/kWh) (3)	0.0147	0.0147	0.0147	0.0146	0.0146	0.0145
Fixed O&M Costs ($/kW/year) (3)	19.29	19.29	19.29	19.29	19.29	19.29

(1) Costs are presented in constant 2018 dollars.
(2) Service life is estimated to be 30 years (on average) by manufacturers, depending on duty cycle and proper maintenance with several minor and major engine overhauls during this operating period as completed per the manufacturer's recommendations.
(3) Variable and fixed O&M costs represented in constant 2018 dollars

Table 5-5.
1,200 kW Industrial Natural Gas Reciprocating Engine Capital Costs – Reference New Equipment (1)
($/kW-AC)

Year	2015	2018	2020	2030	2040	2050
Equipment	1,107	1,104	1,103	1,098	1,092	1,089
Installation Labor and Materials	493	492	491	489	487	485
Engineering/Construction Management/Contingency(2)	650	648	647	644	641	639
Owners Costs	226	225	225	224	223	222
Total Installed Cost	**2,476**	**2,469**	**2,466**	**2,455**	**2,442**	**2,436**

(4) Costs are presented as constant 2018 dollars.
(5) Includes engineering, distributable costs, construction management, and start-up.

5.1.6 Advanced Technologies Projections

Compared with other technologies discussed in this report, the reciprocating engine technology is considered very mature technology. Some advances continue to be made on these power generators (e.g., laser ignition, which has been shown to increase efficiency); however, reducing installation costs is not the primary focus area. The DOE ARES program aims to achieve 50% brake thermal efficiency (80+% with CHP), a maximum of 0.1 g/bhp-hr NO_X emissions, maintenance cost lower than $0.01/EkW-hr, and a continued cost competitiveness. Two of the three industry partners (Caterpillar and GE Dresser Waukesha) withdrew from the ARES program based on business considerations with regard to distributed energy technologies.[75] Cummins demonstrated < 0.1 g/bhp-hr NOx with lean burn combustion recipe and waste heat recovery system and demonstrated Phase III target of 50% efficiency.[75] Argonne National Laboratory (ANL) and Oak Ridge National Laboratory (ORNL) completed advancements laser ignition, emissions reduction, and engine materials.

Cost reductions historically accompany the deployment of a technology from one sales volume to a relatively higher sales volume, but millions of reciprocating engines have already been produced during the prior century through 2019. The reciprocating engines also compete with the renewable technologies, NGCCs, and other electricity generators in the electricity market, but they do not appear to grow in significant numbers in modeling results because of their costs relative to other technologies. In five simulations for EPRI in 2013, the unit capital costs ($/kW) did not drop from 2015 levels until the year 2045.

Advances in other electricity-generating technologies may also improve the efficiency of reciprocating engines. For example, research projects at the DOE National Energy Technology Laboratory (NETL) address hydrogen turbines. Natural gas turbines and reciprocating engines operating in CHP systems, which meet regulatory emission requirements, could also benefit from the improvements in combined-cycle units. However, their current deployment is more often for peaking or emergency conditions

[75] DOE Program Brochure. https://www.energy.gov/sites/prod/files/2017/01/f34/0419-Recip%20Engine%20Brochure%20121916_compliant.pdf

(because of the short start-up times), thus extending the expected payback periods for these units.

Because of the uncertainties associated with a competitive marketplace environment and the general acknowledgment that these technologies are very mature, the advanced technology cases for natural gas turbines and reciprocating engines were not assumed to have lower unit costs ($/kW) than those in the reference cases. Based on the DOE ARES program accomplishments, we are assuming a maximum commercial introduction by 2030 with 45% efficiency and 50% efficiency in 2040.

Table 5-6.
1,200 kW Industrial Natural Gas Reciprocating Engine Performance and O&M – Advanced New Equipment(1)

Year	2015	2018	2020	2030	2040	2050
Output Capacity (kW-AC)	1,200	1,200	1,200	1,200	1,200	1,200
Capacity Factor (%)	93	93	93	93	93	93
Hours of Operation (hrs)	8,147	8,147	8,147	8,147	8,147	8,147
Electric Heat Rate, HHV (Btu/kWh)	8,727	8,639	8,530	7582	6824	6824
Electric Efficiency, HHV (%)	39.10	39.51	40	45	50	50
Fuel Input (MMBtu/hr)	10.47	10.37	10.24	9.10	8.19	8.19
Thermal Output (MMBtu/hr)	4.08	4.04	3.99	3.55	3.19	3.19
Total CHP Efficiency (%)	78.1	78.5	79.0	84.0	89.0	89.0
Power to Thermal Output Ratio	1.00	1.01	1.03	1.16	1.28	1.28
Net Heat Rate (Btu/kWh)	4,477	4,432	4,376	3,890	3,501	3,501
Equipment Lifetime (years)(2)	30	30	30	30	30	30
Variable O&M Costs ($/kWh)(3)	0.0147	0.0147	0.0147	0.0147	0.0147	0.0147
Fixed O&M Costs ($/kW/year)(3)	19.29	19.29	19.29	19.29	19.29	19.29

(1) Costs are presented in constant 2018 dollars.
(2) Service life is estimated to be 30 years (on average) by manufacturers, depending on duty cycle and proper maintenance with several minor and major engine overhauls during this operating period as completed per the manufacturer's recommendations.
(3) Variable and fixed O&M costs represented in constant 2018 dollars

Table 5-7.
1,200 kW Industrial Natural Gas Reciprocating Engine Capital Costs – Advanced New Equipment (1)
($/kW-AC)

Year	2015	2018	2020	2030	2040	2050
Equipment	1,107	1,104	1,103	980	882	882
Installation Labor and Materials	493	492	491	489	487	487
Engineering/Construction Management/Contingency (2)	650	648	647	644	641	639
Owners Costs	226	225	225	200	180	180
Total Installed Cost	**2,476**	**2,469**	**2,466**	**2,313**	**2,190**	**2,188**

(1) Costs are presented as constant 2018 dollars. No change in manufacturing cost is projected for advanced technology performance improvement.
(2) Includes engineering, distributable costs, construction management, and start-up.

5.2 Industrial – Natural Gas Reciprocating Engine – 3,000 kW (IRE3)

5.2.1 Equipment and Systems

The Industrial Natural Gas Reciprocating Engine Facility produces a nominal 3,000 kW-AC capacity (IRE3).

5.2.2 Technology Specifications

The technology specifications for the IRE3 are presented in Table 5-8:

Table 5-8.
Industrial – Natural Gas Reciprocating Engine – 3,000 kW–AC

Life Cycle	2018
Output Capacity (kW)	3,000
Electric Heat Rate, HHV (Btu/kWh)	8,654
Electric Efficiency, HHV (%)	39.43
Fuel Input (MMBtu/hr)	25.96
Thermal Output (MMBtu/hr)	9.87
Total CHP Efficiency (%)	77.43
Power to Thermal Output Ratio	1.04
Net Heat Rate (Btu/kWh)	4,543
Equipment Lifetime (years)	30
Variable O&M Costs ($/kWh)	0.0131
Fixed O&M Costs ($/kW/year)	17.41

5.2.3 Capital Cost Estimate

The Cost Estimate for the IRE3 facility with a nominal capacity of 3 MW-AC is $1,954/kW-AC.

The Cost Estimate for the IRE3 3,000 kW assumes having a small site near the end use or transmission line. A two-acre site is assumed to be required to be cleared, leveled, and conditioned to accept underground utilities such as water, gas, electric, sewage, and drainage, which are also found at large facilities. The IRE3 engine price was obtained from a local dealer. Peripheral electrical equipment necessary to complement the industrial power plant needs has been added to the estimate; a diesel storage tank is also included. The Cost Estimate includes site preparation, structures, equipment, electrical, distributable cost, engineering and design, and subcontractor fee and budget contingency. All estimated costs are expressed in $/kW. All numbers in these estimates are based on prices and wages for the U.S. national average.

Table 5-9 summarizes the Cost Estimate categories for the IRE3 facility.

Table 5-9.
Base Plant Site Capital Cost Estimate for IRE3 (2018)

Technology:	**IRE3**
Nominal Capacity (ISO):	**3,000 kW-AC**
Nominal Heat Rate (ISO):	**7,810 Btu/kWh-HHV**

Capital Cost Category	($/kW-AC) (2018 $)
Equipment Supply	928
Installation – Labor and Materials	354
Engineering, Construction Management, and Contingency (1)	494
Owners Costs	178
Total Installed EPC Project Cost with Owner's Costs	**1,954**

(1) Includes engineering, distributable costs, construction management, and start-up.

5.2.4 O&M Cost Estimate

Table 5-10 presents the O&M costs for the IRE3 facility.

Table 5-10.
O&M Costs for IRE3

Technology	IRE3
Fixed O&M	$17.41/kW-year
Variable O&M	$0.0131/kWh

See discussion in Section 5.1.4.

5.2.5 Reference Technologies Projections

Table 5-11.
3,000 kW Industrial Natural Gas Reciprocating Engine Performance and O&M – Reference New Equipment (1)

Year	2015	2018	2020	2030	2040	2050
Output Capacity (kW)	3,000	3,000	3,000	3,000	3,000	3,000
Capacity Factor (%)	93	93	93	93	93	93
Hours of Operation (hrs)	8,147	8,147	8,147	8,147	8,147	8,147
Electric Heat Rate, HHV (Btu/kWh)	8,667	8,654	8,645	8,602	8,559	8,538
Electric Efficiency, HHV (%)	39.37	39.43	39.47	39.67	39.86	39.96
Fuel Input (MMBtu/hr)	26.00	25.96	25.94	25.81	25.68	25.61
Thermal Output (MMBtu/hr)	9.88	9.87	9.86	9.81	9.76	9.73
Total CHP Efficiency (%)	77.37	77.43	77.47	77.67	77.86	77.96
Power to Thermal Output Ratio	1.04	1.04	1.04	1.04	1.05	1.05
Net Heat Rate (Btu/kWh)	4,550	4,543	4,539	4,516	4,493	4,482
Equipment Lifetime(2)	30	30	30	30	30	30
Variable O&M Costs ($/kWh) (3)	0.0131	0.0131	0.0131	0.0131	0.0130	0.0129
Fixed O&M Costs ($/kW/year) (3)	17.41	17.41	17.41	17.41	17.41	17.41

1) Based on Caterpillar Model CG260-12.
2) Service life is estimated to be 30 years (on average) by manufacturers, depending on duty cycle and proper maintenance with several minor and major engine overhauls during this operating period completed as manufacturer recommended.
3) Variable and fixed O&M costs represented in constant 2018 dollars.

Table 5-12.
3,000 kW Industrial Natural Gas Reciprocating Engine Capital Costs – Reference New Equipment(1)
($/kW-AC)

Year	2015	2018	2020	2030	2040	2050
Equipment	930	928	927	922	918	916
Installation Labor and Materials	355	354	354	352	350	349
Engineering/Construction Management/Contingency (2)	496	494	493	491	489	487
Owners Costs	179	178	178	177	176	176
Total Installed Cost	**1,960**	**1,954**	**1,952**	**1,942**	**1,933**	**1,928**

(1) Costs are presented as constant 2018 dollars.
(2) Includes engineering, distributable costs, construction management, and start-up.

5.2.6 Advanced Technologies Projections

See section 5.1.6 discussion.

Table 5-13.
3,000 kW Industrial Natural Gas Reciprocating Engine Performance and O&M – Advanced New Equipment

Year	2015	2018	2020	2030	2040	2050
Output Capacity (kW)	3,000	3,000	3,000	3,000	3,000	3,000
Capacity Factor (%)	93	93	93	93	93	93
Hours of Operation (hrs)	8,147	8,147	8,147	8,147	8,147	8,147
Electric Heat Rate, HHV	8,667	8,654	8,645	7,584	6,826	6,826
Electric Efficiency, HHV (%)	39.37	39.43	39.47	45	50	50
Fuel Input (MMBtu/hr)	26.00	25.96	25.94	22.75	20.48	20.48
Thermal Output (MMBtu/hr)	9.88	9.87	9.86	8.65	7.78	7.78
Total CHP Efficiency (%)	77.37	77.43	77.47	83.0	88.0	88.0
Power to Thermal Output Ratio	1.04	1.04	1.04	1.18	1.32	1.32
Net Heat Rate (Btu/kWh)	4,550	4,543	4,539	3,982	3,584	3,584
Equipment Lifetime (years)(2)	30	30	30	30	30	30
Variable O&M Costs ($/kWh)	0.0121	0.0131	0.0131	0.0131	0.0118	0.0118
Fixed O&M Costs ($/kW/year)	16.10	17.41	17.41	17.41	17.41	17.41

1) Based on Caterpillar Model CG260-12.
2) Service life is estimated to be 30 years (on average) by manufacturers, depending on duty cycle and proper maintenance with several minor and major engine overhauls during this operating period completed as manufacturer recommended.
3) Variable and fixed O&M costs represented in constant 2018 dollars.

Table 5-14.
3,000 kW Industrial Natural Gas Reciprocating Engine Capital Costs – Advanced New Equipment (1)
($/kW-AC)

Year	2015	2018	2020	2030	2040	2050
Equipment ($/kW)	930	928	927	813	732	732
Installation Labor and Materials ($/kW)	355	354	354	352	350	350
Engineering/Construction Management/Contingency (2)	496	494	493	491	489	489
Owners Costs	179	178	178	156	141	141
Total Installed Cost ($/kW)	**1,960**	**1,954**	**1,952**	**1,812**	**1,712**	**1,712**

(1) Costs are presented as constant 2018 dollars. No change in manufacturing cost is projected for advanced technology performance improvement.
(2) Includes engineering, distributable costs, construction management, and start-up.

5.3 Industrial – Natural Gas Turbine – 4,600 kW (IGT5)

5.3.1 Equipment and Systems

The Industrial Natural Gas Turbine System for 4,600 kW-AC (IGT5) produces 4.6 kW-AC net of electricity. The facility uses a 4.6 MW natural gas turbine.

5.3.2 Technology Specifications

The IGT5 facility has one natural gas turbine mechanically coupled with an electric generator. The generator is a 60 Hertz (Hz) machine rated at about 6 mega-volt-amperes (MVA) with an output voltage of 13.8 kilovolt (kV). The electric generator is connected to a high-voltage bus in the facility switchyard via a dedicated generator circuit breaker, Generator Step-up (GSU) transformer, high-voltage circuit breaker, and a disconnect switch. The GSU increases the voltage from the electric generator from 13.8 kV to interconnected transmission system high voltage.

The IGT5 facility is controlled using a DCS. The DCS provides centralized control of the facility by integrating the control systems provided with the GT and associated electric generator and the control of BOP systems and equipment.

The technology specifications for the IGT5 are presented in Table 5-15:

Table 5-15.
Industrial – Natural Gas Turbine – 4,600 kW-AC

Life Cycle	2018
Output Capacity (kW)	4,600
Electric Heat Rate, HHV (Btu/kWh)	9,768
Electric Efficiency, HHV (%)	34.68
Fuel Input (MMBtu/hr)	44.93
Thermal Output (MMBtu/hr)	13.93
Total CHP Efficiency (%)	65.93
Power to Thermal Output Ratio	1.13
Net Heat Rate (Btu/kWh)	5,983
Equipment Life (years)	35
Variable O&M Costs ($/kWh)	0.0091
Fixed O&M Costs ($/kW/year)	16.80

5.3.3 Capital Cost Estimate

The Cost Estimate for the IGT5 facility with a nominal capacity of 4.6 MW-AC is $1,644/kW-AC.

The Cost Estimate for the IGT5 4,600 kW assumes having a small site located adjacent to the end use. A two-acre site is assumed to be required to be cleared, leveled, and conditioned to accept underground utilities such as water, gas, electric, sewage, and drainage, which are also found at large facilities. The combustion turbine price was obtained from *Gas Turbine World 2019 TW Handbook Volume 34*. The equipment cost for the 4,600 kW machine, including freight delivery to the site, were obtained. Peripheral electrical equipment necessary to complement the peaking power plant needs has been added to the estimate. The Cost Estimate includes site preparation, gas tapping costs, structures, equipment, electrical, distributable cost, engineering and design, and subcontractor fee and budget contingency. All estimated costs are expressed in $/kW. All numbers in these estimates are based on prices and wages for the U.S. national average.

Table 5-16 summarizes the Cost Estimate categories for the IGT5 facility.

Table 5-16.
Base Plant Site Capital Cost Estimate for IGT5 (2018)

Technology: **1GT5**
Nominal Capacity (ISO): **4,600 kW-AC**
Nominal Heat Rate (ISO): **9,768 Btu/kWh-HHV**

Capital Cost Category	($/kW-AC) (2018 $)
Equipment Supply	846
Installation – Labor and Materials	253
Engineering, Construction Management, and Contingency (1)	396
Owners Costs	149
Total Installed EPC Project Cost with Owner's Costs	**1,644**

(1) Includes engineering, distributable costs, construction management, and start-up.

5.3.4 O&M Cost Estimate

In addition to the general items discussed in the section of this report entitled *O&M Cost Estimate*, the GT facility includes major maintenance on the electric generator (each about every six years dependent upon the unit's CF). O&M cost assumptions include labor, provisions for the completion of scheduled and unscheduled maintenance, and major maintenance costs. For the analysis, a CF of 93% was assumed. Table 5-17 presents the FOM and VOM costs for the IGT5 facility.

Table 5-17.
O&M Costs for IGT5

Technology	IGT5
Fixed O&M	$16.80/kW-year
Variable O&M	$0.0091/kWh

See discussion in Section 5.1.4.

5.3.5 Reference Technologies Projections

See section 5.2.5 discussion.

Table 5-18.
4,600 kW Industrial Natural Gas Turbine Performance and O&M – Reference New Equipment (1)

Year	2015	2018	2020	2030	2040	2050
Output Capacity (kW-AC)	4,600	4,600	4,600	4,600	4,600	4,600
Capacity Factor (%)	93	93	93	93	93	93
Hours of Operation (hrs)	8,147	8,147	8,147	8,147	8,147	8,147
Electric Heat Rate, HHV (Btu/kWh)	9,827	9,768	9,729	9,535	9,346	9,252
Electric Efficiency, HHV (%)	34.72	34.94	35.07	35.78	36.51	36.88
Fuel Input (MMBtu/hr)	45.21	44.93	44.75	43.86	42.99	42.56
Thermal Output (MMBtu/hr)	14.01	13.93	13.87	13.60	13.33	13.19
Total CHP Efficiency (%)	65.93	65.93	65.93	65.93	65.93	65.93
Power to Thermal Output Ratio	1.12	1.13	1.13	1.15	1.18	1.19
Net Heat Rate (Btu/kWh)	6,019	5,983	5,959	5,840	5,724	5,667
Equipment Lifetime (years)(2)	35	35	35	35	35	35
Variable O&M Costs ($/kWh) (3)	0.0092	0.0091	0.0091	0.0089	0.0089	0.0088
Fixed O&M Costs ($/kW/year) (3)	16.80	16.80	16.80	16.80	16.80	16.80

(1) Based on Solar Mercury 50. Assumed representative for this size-class, with potential for CHP application per modifications.
(2) Service life is estimated to be 35 years (on average) by manufacturers, depending on duty cycle and proper maintenance with several minor and major engine overhauls during this operating period as completed per the manufacturer's recommendations.
(3) Variable and fixed costs represented in constant 2018 dollars.

Table 5-19.
4,600 kW Industrial Natural Gas Turbine Capital Costs– Reference New Equipment (1)
($/kW-AC)

Year	2015	2018	2020	2030	2040	2050
Equipment	851	846	837	820	804	796
Installation Labor and Materials	255	253	250	245	240	238
Engineering/Construction Management/Contingency (2)	399	396	392	384	376	372
Owners Costs	150	149	147	144	142	140
Total Installed Cost	**1,655**	**1,644**	**1,626**	**1,593**	**1,562**	**1,546**

(1) Costs are presented as constant 2018 dollars.
(2) Includes engineering, distributable costs, construction management, and start-up.

5.3.6 Advanced Technologies Projections

See the discussion in Section 5.1.6; the same assumptions apply.

Table 5-20.
4,600 kW Industrial Natural Gas Turbine Performance and O&M – Advanced New Equipment

Year	2015	2018	2020	2030	2040	2050
Output Capacity (kW-AC)	4,600	4,600	4,600	4,600	4,600	4,600
Capacity Factor (%)	93	93	93	93	93	93
Hours of Operation (hrs)	8,147	8,147	8,147	8,147	8,147	8,147
Electric Heat Rate, HHV (Btu/kWh)	9,827	9,768	9,729	8,533	6,826	6,826
Electric Efficiency, HHV (%)	34.72	34.94	35.07	40	50	50
Fuel Input (MMBtu/hr)	45.21	44.93	44.75	39.25	31.40	31.40
Thermal Output (MMBtu/hr)	14.01	13.93	13.87	12.16	9.73	9.73
Total CHP Efficiency (%)	65.93	65.93	65.93	71.0	81.0	81.0
Power to Thermal Output Ratio	1.12	1.13	1.13	1.29	1.61	1.61
Net Heat Rate (Btu/kWh)	6,019	5,983	5,959	5,227	4,182	4,182
Equipment Lifetime (years)(2)	35	35	35	35	35	35
Variable O&M Costs ($/kWh)	0.0092	0.0091	0.0089	0.0078	0.0063	0.00635
Fixed O&M Costs ($/kW/year)	16.80	16.80	16.80	16.80	16.80	16.80

(1) Based on Solar Mercury 50.
(2) Service life is estimated to be 35 years (on average) by manufacturers, depending on duty cycle and proper maintenance with several minor and major engine overhauls during this operating period as completed per the manufacturer's recommendations.
(3) Variable and fixed costs represented in constant 2018 dollars.

Table 5-21.
4,600 kW Industrial Natural Gas Turbine Capital Costs – Advanced New Equipment (1)
($/kW-AC)

Year	2015	2018	2020	2030	2040	2050
Equipment ($/kW)	851	846	837	734	661	796
Installation Labor and Materials ($/kW)	255	253	250	245	240	238
Engineering/Construction Management/Contingency (2)	399	396	392	384	376	372
Owners Costs	150	149	147	129	116	116
Total Installed Cost ($/kW)	**1,655**	**1,644**	**1,626**	**1,492**	**1,393**	**1,393**

(1) Costs are presented as constant 2018 dollars. No change in manufacturing cost is projected for advanced technology performance improvement.
(2) Includes engineering, distributable costs, construction management, and start-up.

5.4 Industrial – Natural Gas Turbine – 10,360 kW (IGT10)

5.4.1 Equipment and Systems

The industrial natural gas turbine facility (IGT10) produces 10.36 MW-AC net of electricity. The IGT10 facility consists primarily of one commercially available, factory-packaged combustion turbine with 10.36 MW capacity. The design output of the natural gas turbine is about 10,360 kW of net capacity.

5.4.2 Technology Specifications

There would be one turbine generator at the IGT10 facility, which is to be rated for about 10.36 MW. The IGT10 facility has one natural gas turbine mechanically coupled with an electric generator. The generator is a 60 Hz machine rated at about 11.5 MVA with an output voltage of 13.8 kV. The electric generator is connected to a high-voltage bus in the facility switchyard via a dedicated generator circuit breaker, GSU, high-voltage circuit breaker, and a disconnect switch. The GSU increases the voltage from the electric generator from 13.8 kV to interconnected transmission system high voltage.

The IGT10 Facility is controlled using a DCS. The DCS provides centralized control of the facility by integrating the control systems provided with the GT and associated electric generator and the control of BOP systems and equipment.

The technology specifications for the IGT10 are presented in Table 5-22:

Table 5-22.
Industrial – Natural Gas Turbine – 10,360 kW–AC

Life Cycle	2018
Output Capacity (kW-AC)	10,360
Electric Heat Rate, HHV (Btu/kWh)	10,807
Electric Efficiency, HHV (%)	31.35
Fuel Input (MMBtu/hr)	111.96
Thermal Output (MMBtu/hr)	41.43
Total CHP Efficiency (%)	68.57
Power to Thermal Output Ratio	0.85
Net Heat Rate (Btu/kWh)	5,809
Equipment Lifetime (years)	35
Variable O&M Costs ($/kWh)	0.0070
Fixed O&M Costs ($/kW/year)	16.29

5.4.3 Capital Cost Estimate

The Cost Estimate for the IGT10 facility with a nominal capacity of 10.36 MW-AC is $1,536/kW.

The Cost Estimate for the IGT10 10,360 kW assumes having a small site located adjacent to the end use. A five-acre site is assumed to be required to be cleared, leveled, and conditioned to accept underground utilities such as water, gas, electric, sewage, and drainage, which are also found at large facilities. The combustion turbine price was obtained from *Gas Turbine World 2019 TW Handbook Volume 34*. The equipment cost for the 10,360 kW machine, including freight delivery to the site, were obtained. Peripheral electrical equipment necessary to complement the peaking power plant needs has been added to the estimate. The Cost Estimate includes site preparation, gas tapping costs, structures, equipment, electrical, distributable cost, engineering and design, and subcontractor fee and budget contingency. All estimated costs are expressed in $/kW. All numbers in these estimates are based on prices and wages for the U.S. national average.

Table 5-23 summarizes the Cost Estimate categories for the IGT10 facility.

Table 5-23.
Base Plant Site Capital Cost Estimate for IGT10 (2018)

Technology: IGT10
Nominal Capacity (ISO): 10,360 kW-AC
Nominal Heat Rate (ISO): 12,037 Btu/kWh-HHV

Capital Cost Category	($/kW-AC) (2018 $)
Equipment Supply	761
Installation – Labor and Materials	335
Engineering, Construction Management, and Contingency (1)	300
Owners Costs	140
Total Installed EPC Project Cost with Owner's Cost	**1,536**

(1) Includes engineering, distributable costs, construction management, and start-up.

5.4.4 O&M Cost Estimate

In addition to the general items discussed in the section of this report entitled *O&M Cost Estimate*, the IGT10 facility includes major maintenance on the turbine and electric generator about every six years dependent upon the unit's capacity factor. O&M cost assumptions include labor, provisions for the completion of scheduled and unscheduled maintenance, and major maintenance costs. For the analysis, a CF of 93% was assumed.

Table 5-24 presents the FOM and VOM costs for the IGT10 facility.

Table 5-24.
O&M Costs for IGT10

Technology	IGT10
Fixed O&M	$16.29/kW-year
Variable O&M	$0.0070/kWh

See discussion in Section 5.1.4.

5.4.5 Reference Technologies Projections

Table 5-25.
10,360 kW Industrial Natural Gas Turbine Performance and O&M – Reference New Equipment (1)

Year	2015	2018	2020	2030	2040	2050
Output Capacity (kW-AC)	10,360	10,360	10,360	10,360	10,360	10,360
Capacity Factor (%)	93	93	93	93	93	93
Hours of Operation (hrs)	8,147	8,147	8,147	8,147	8,147	8,147
Electric Heat Rate, HHV (Btu/kWh)	10,872	10,807	10,764	10,549	10,339	10,236
Electric Efficiency, HHV (%)	31.38	31.35	31.70	32.34	33.00	33.33
Fuel Input (MMBtu/hr)	112.64	111.96	111.51	109.29	107.12	106.04
Thermal Output (MMBtu/hr)	41.68	41.43	41.26	40.44	39.63	39.24
Total CHP Efficiency (%)	68.38	68.57	68.70	69.34	70.00	70.33
Power to Thermal Output Ratio	0.85	0.85	0.86	0.87	0.89	0.90
Net Heat Rate (Btu/kWh)	5,844	5,809	5,785	5,670	5,557	5,502
Equipment Lifetime (years)(2)	35	35	35	35	35	35
Variable O&M Costs ($/kWh)(3)	0.0070	0.0070	0.0070	0.0069	0.0067	0.0067
Fixed O&M Costs ($/kW/year)(3)	16.29	16.29	16.29	16.29	16.29	16.29

(1) Based on Siemens SGT 400.
(2) Service life is estimated to be 35 years (on average) by manufacturers, depending on duty cycle and proper maintenance with several minor and major engine overhaul during operating period, completed per manufacturer recommendations.
(3) Variable and fixed costs represented in constant 2018 dollars.

Table 5-26.
10,360 kW Industrial Natural Gas Turbine Capital Costs – Reference New Equipment (1)
($/kW-AC)

Year	2015	2018	2020	2030	2040	2050
Equipment	762	761	753	738	723	716
Installation Labor and Materials	335	335	331	325	318	315
Engineering/Construction Management/Contingency (2)	300	300	297	291	285	282
Owners Costs	140	140	138	136	133	132
Total Installed Cost	**1,537**	**1,536**	**1,519**	**1,489**	**1,459**	**1,445**

(1) Costs presented are in constant 2018 dollars.
(2) Includes engineering, distributable costs, construction management, and start-up.

5.4.6 Advanced Technologies Projections

See the discussion in Section 5.1.6 – same assumptions apply.

Table 5-27.
10,360 kW Industrial Natural Gas Turbine Performance and O&M – Advanced New Equipment

Year	2015	2018	2020	2030	2040	2050
Output Capacity (kW-AC)	10,360	10,360	10,360	10,401	10,453	10,537
Capacity Factor (%)	93	93	93	93	93	93
Hours of Operation (hrs)	8,147	8,147	8,147	8,147	8,147	8,147
Electric Heat Rate, HHV (Btu/kWh)	10,872	10,807	10,764	7582	6824	6824
Electric Efficiency, HHV (%)	31.38	31.35	31.70	40	45	50
Fuel Input (MMBtu/hr)	112.64	111.96	111.51	88.40	78.57	70.72
Thermal Output (MMBtu/hr)	41.68	41.43	41.26	32.71	29.08	26.17
Total CHP Efficiency (%)	68.38	68.57	68.70	77.0	82.0	87.0
Power to Thermal Output Ratio	0.85	0.85	0.86	1.08	1.22	1.35
Net Heat Rate (Btu/kWh)	5,844	5,809	5,785	4,586	4,076	3,669
Equipment Lifetime (years)(2)	35	35	35	35	35	35
Variable O&M Costs ($/kWh)(3)	0.0070	0.0070	0.0070	0.0055	0.0049	0.0040
Fixed O&M Costs ($/kW/year)(3)	16.29	16.29	16.29	16.29	16.29	16.29

(1) Based on Siemens SGT 400. Advanced projections are not manufacturer's specifications.
(2) Service life is estimated to be 35 years (on average) by manufacturers, depending on duty cycle and proper maintenance with several minor and major engine overhaul during operating period, completed per manufacturer recommendations.
(3) Variable and fixed costs represented in constant 2018 dollars.

Table 5-28.
10, 360 kW Industrial Natural Gas Turbine Capital Costs – Advanced New Equipment (1)
($/kW-AC)

Year	2015	2018	2020	2030	2040	2050
Equipment	762	761	753	597	531	478
Installation Labor and Materials	335	335	331	262	233	210
Engineering/Construction Management/Contingency (2)	300	300	297	291	285	282
Owners Costs	140	140	138	109	97	88
Total Installed Cost	**1,537**	**1,536**	**1,519**	**1,259**	**1,146**	**1,058**

(1) Costs are presented as constant 2018 dollars. No change in manufacturing cost is projected for advanced technology performance improvement.
(1) Includes engineering, distributable costs, construction management, and start-up.

5.5 Industrial – Natural Gas Turbine – 23,200 kW (IGT25)

5.5.1 Equipment and Systems

The industrial natural gas turbine facility with 23.2 MW-AC capacity (IGT25) generates about 23.2 MW. The IGT25 facility consists of a GE LM2500 DLE combustion turbine.

5.5.2 Technology Specifications

There would be one turbine generator at the IGT25 facility using aeroderivative technology commercially available in the marketplace. The turbine generator is to be

rated for about 23.2 MW. The IGT25 facility has one natural gas turbine mechanically coupled with an electric generator. The generator is a 60 Hz machine rated at about 28.5 MVA with an output voltage of 13.8 kV. The electric generator is connected to a high-voltage bus in the facility switchyard via a dedicated generator circuit breaker, GSU, high-voltage circuit breaker, and a disconnect switch. The GSU increases the voltage from the electric generator from 13.8 kV to interconnected transmission system high voltage.

The IGT25 facility is controlled using a DCS. The DCS provides centralized control of the facility by integrating the control systems provided with the GT and associated electric generator and the control of BOP systems and equipment.

The technology specifications for the IGT25 are presented in Table 5-29:

Table 5-29.
Industrial Natural Gas Turbine – 23,200 kW-AC

Year	2018
Output Capacity (kW-AC)	23,200
Electric Heat Rate, HHV (Btu/kWh)	10,276
Electric Efficiency, HHV (%)	32.97
Fuel Input (MMBtu/hr)	238.39
Thermal Output (MMBtu/hr)	90.59
Total CHP Efficiency (%)	71.21
Power to Thermal Output Ratio	0.87
Net Heat Rate (Btu/kWh)	5,395
Equipment Lifetime (years)	35
Variable O&M Costs ($/kWh)	0.0041
Fixed O&M Costs ($/kW/year)	14.84

5.5.3 Capital Cost Estimate

The Cost Estimate for the IGT25 facility with a nominal capacity of 23.2 MW-AC is $1,074/kW-AC.

The Cost Estimate for the IGT25 25,000 kW assumes having a small site located near the end use. A 10-acre site is assumed to be required to be cleared, leveled, and conditioned to accept underground utilities such as water, gas, electric, sewage, and drainage, which are also found at large facilities. The combustion turbine price was obtained from *Gas Turbine World 2019 TW Handbook Volume 34*. The equipment cost for the 23,200 kW machine, including freight delivery to the site, were obtained. Peripheral electrical equipment necessary to complement the peaking power plant needs has been added to the estimate. The Cost Estimate includes site preparation, gas tapping costs, structures, equipment, electrical, distributable cost, engineering and design, and subcontractor fee and budget contingency. All estimated costs are expressed in $/kW. All numbers in these estimates are based on prices and wages for the U.S. national average.

Table 5-30 summarizes the Cost Estimate categories for the IGT25 facility.

Table 5-30.
Base Plant Site Capital Cost Estimate for IGT25 (2018)

Technology: IGT25
Nominal Capacity (ISO): 23,200 kW-AC
Nominal Heat Rate (ISO): 10,189 Btu/kWh-HHV

Capital Cost Category	($/kW-AC) (2018 $)
Equipment Supply	570
Installation – Labor and Materials	213
Engineering, Construction Management, and Contingency (1)	193
Owners Costs	98
Total Installed EPC Project Cost with Owner's Cost	**1,074**

(1) Includes engineering, distributable costs, construction management, and start-up.

5.5.4 O&M Cost Estimate

In addition to the general items discussed in the section of this report entitled "O&M Cost Estimate," the IGT10 facility includes major maintenance on the turbine and electric generator about every six years dependent upon the unit's capacity factor. O&M cost assumptions include labor, provisions for the completion of scheduled and unscheduled maintenance, and major maintenance costs. For the analysis, a CF of 93% was assumed. Table 5-31 presents the O&M costs for the IGT25 facility.

Table 5-31.
O&M Costs for IGT25

Technology	IGT25
Fixed O&M	$14.84/kW-year
Variable O&M	$0.0041/kWh

See discussion in Section 5.1.4.

5.5.5 Reference Technologies Projections

Table 5-32.
23,200 kW Industrial Natural Gas Turbine Performance and O&M – Reference New Equipment

Year	2015	2018	2020	2030	2040	2050
Output Capacity (kW-AC)	23,200	23,200	23,200	23,200	23,200	23,200
Capacity Factor (%)	93	93	93	93	93	93
Hours of Operation (hrs)	8,147	8,147	8,147	8,147	8,147	8,147
Electric Heat Rate, HHV (Btu/kWh)	10,338	10,276	10,234	10,030	9,831	9,733
Electric Efficiency, HHV (%)	33.01	32.97	33.34	34.00	34.71	35.06
Fuel Input (MMBtu/hr)	239.83	238.39	237.43	232.71	228.08	225.80
Thermal Output (MMBtu/hr)	91.14	90.59	90.22	88.43	86.67	85.80
Total CHP Efficiency (%)	71.01	71.21	71.34	72.02	72.71	73.06
Power to Thermal Output Ratio	0.87	0.87	0.88	0.90	0.91	0.92
Net Heat Rate (Btu/kWh)	5,427	5,395	5,373	5,266	5,161	5,110
Equipment Lifetime (years)(1)	35	35	35	35	35	35
Variable O&M Costs ($/kWh)(2)	0.0041	0.0041	0.0041	0.0040	0.0040	0.0039
Fixed O&M Costs ($/kW/year)(2)	14.84	14.84	14.84	14.84	14.84	14.84

(1) Service life is estimated to be 35 years (on average) by manufacturers, depending on duty cycle and proper maintenance with several minor and major engine overhauls during this operating period, completed per the manufacturer's recommendations.

(2) Variable and fixed costs represented in constant 2018 dollars.

Table 5-33.
23,200 kW Industrial Natural Gas Turbine Capital Costs – Reference New Equipment (1)
($/kW-AC)

Year	2015	2018	2020	2030	2040	2050
Equipment	571	570	564	552	541	536
Installation Labor and Materials	213	213	211	206	202	200
Engineering/Construction Management/Contingency (2)	193	193	191	187	183	181
Owners Costs	98	98	97	95	93	92
Total Installed Cost	**1,075**	**1,074**	**1,062**	**1,041**	**1,020**	**1,010**

(1) Costs are presented as constant 2018 dollars.
(2) Includes engineering, distributable costs, construction management, and start-up.

5.5.6 Advanced Technologies Projections

See the discussion in Section 5.1.6 – same assumptions apply.

Table 5-34.
23,200 kW Industrial Natural Gas Turbine Performance and O&M – Advanced New Equipment

Year	2015	2018	2020	2030	2040	2050
Output Capacity (kW-AC)	23,200	23,200	23,200	23,270	23,339	23,386
Capacity Factor (%)	93	93	93	93	93	93
Hours of Operation (hrs)	8,147	8,147	8,147	8,147	8,147	8,147
Electric Heat Rate, HHV (Btu/kWh)	10,338	10,276	10,038	8,533	7,584	6,826
Electric Efficiency, HHV (%)	33.01	33.21	34	40	45	50
Fuel Input (MMBtu/hr)	239.84	238.40	232.89	197.95	175.96	158.36
Thermal Output (MMBtu/hr)	91.14	90.59	88.50	75.22	66.86	60.18
Total CHP Efficiency (%)	71.0	71.2	72.0	78.0	83.0	88.0
Power to Thermal Output Ratio	0.87	0.87	0.89	1.05	1.18	1.32
Net Heat Rate (Btu/kWh)	5,427	5,395	5,270	4,480	3,982	3,584
Equipment Lifetime (years)(1)	35	35	35	35	35	35
Variable O&M Costs ($/kWh) (2)	0.0038	0.0041	0.0040	0.0034	0.0030	0.0027
Fixed O&M Costs ($/kW/year) (2)	13.73	14.84	14.84	14.84	14.84	14.84

(1) Costs are presented as constant 2018 dollars.
(2) Includes engineering, distributable costs, construction management, and start-up.

Table 5-35.
23,200 kW Industrial Natural Gas Turbine Capital Costs – Advanced New Equipment (1)

Year	2015	2018	2020	2030	2040	2050
Equipment ($/kW)	571	570	557	473	421	379
Installation Labor and Materials ($/kW)	213	213	208	177	157	142
Engineering/Construction Management/Contingency (2)	193	193	185	160	142	128
Owners Costs	98	98	96	81	72	65
Total Installed Cost ($/kW)	**1,075**	**1,074**	**1,046**	**891**	**792**	**714**

(1) Costs are presented as constant 2018 dollars. No change in manufacturing cost is projected for advanced technology performance improvement.
(2) Includes engineering, distributable costs, construction management, and start-up.

5.6 Industrial – Natural Gas Turbine – 45,000 kW (IGT45)

5.6.1 Equipment and Systems

There would be one turbine generator at the IGT45 facility using aeroderivative technology commercially available in the marketplace. The turbine generator is to be rated for about 45 MW. The IGT45 facility has one natural gas turbine mechanically coupled with an electric generator. The generator is a 60 Hz machine rated at about 48.5 MVA with an output voltage of 13.8 kV. The electric generator is connected to a high-voltage bus in the facility switchyard via a dedicated generator circuit breaker,

GSU, high-voltage circuit breaker, and a disconnect switch. The GSU increases the voltage from the electric generator from 13.8 kV to interconnected transmission system high voltage.

The IGT40 facility is controlled using a DCS. The DCS provides centralized control of the facility by integrating the control systems provided with the GT and associated electric generator and the control of BOP systems and equipment.

5.6.2 Technology Specifications

The IGT40 facility has one aeroderivative natural gas turbine generator.

The technology specifications for the IGT45 are presented in Table 5-36:

Table 5-36.
Industrial – Natural Gas Turbine – 45,000 kW-AC

Year	2018
Output Capacity (kW-AC)	45,000
Electric Heat Rate, HHV (Btu/kWh)	8,933
Electric Efficiency, HHV (%)	37.93
Fuel Input (MMBtu/hr)	401.99
Thermal Output (MMBtu/hr)	136.68
Total CHP Efficiency (%)	72.20
Power to Thermal Output Ratio	1.12
Net Heat Rate (Btu/kWh)	5,137
Equipment Lifetime (years)	35
Variable O&M Costs ($/kWh)	0.0033
Fixed O&M Costs ($/kW/year)	14.65

5.6.3 Capital Cost Estimate

The Cost Estimate for the IGT45 facility with a nominal capacity of 45 MW-AC is $947/kW-AC.

The Cost Estimate for the IGT45 45,000 kW assumes having a small site located adjacent to the end use. A 15-acre site is assumed to be required to be cleared, leveled, and conditioned to accept underground utilities such as water, gas, electric, sewage, and drainage, which are also found at large facilities. The combustion turbine price was obtained from *Gas Turbine World 2019 TW Handbook Volume 34*. The equipment cost for the 45,000 kW machine, including freight delivery to the site, were obtained. Peripheral electrical equipment necessary to complement the peaking power plant needs has been added to the estimate. The Cost Estimate includes site preparation, gas tapping costs, structures, equipment, electrical, distributable cost, engineering and design, and subcontractor fee and budget contingency. All estimated costs are expressed in $/kW. All numbers in the estimate are based on prices and wages for the U.S. national average.

Table 5-37 summarizes the Cost Estimate categories for the IGT45.

Table 5-37.
Base Plant Site Capital Cost Estimate for IGT45 (2018)

Technology: **IGT45**
Nominal Capacity (ISO): **45,000 kW-AC**
Nominal Heat Rate (ISO): **9,305 Btu/kWh-HHV**

Capital Cost Category	($/kW-AC) (2018 $)
Equipment Supply	470
Installation – Labor and Materials	206
Engineering, Construction Management, and Contingency (1)	169
Owners Costs	**101**
Total Installed EPC Project Cost with Owner's Costs	**947**

(1) Includes engineering, distributable costs, construction management, and start-up.

5.6.4 O&M Cost Estimate

In addition to the general items discussed in the section of this report entitled *O&M Cost Estimate*, the IGT10 facility includes major maintenance on the turbine and electric generator about every six years dependent upon the unit's capacity factor. O&M cost assumptions include labor, provisions for the completion of scheduled and unscheduled maintenance, as well as major maintenance costs. For the analysis, a CF of 93% was assumed.

Table 5-38 presents the O&M costs for the IGT45 facility.

Table 5-38.
O&M Costs for IGT40

Technology	IGT45
Fixed O&M	$14.65/kW-year
Variable O&M	$0.0033/kWh

See discussion in Section 5.1.4.

5.6.5 Reference Technologies Projections

Table 5-39.
45,000 kW Industrial Natural Gas Turbine Performance and O&M – Reference New Equipment (1)

Year	2015	2018	2020	2030	2040	2050
Output Capacity (kW-AC)	45,000	45,000	45,000	45,000	45,000	45,000
Capacity Factor (%)	93	93	93	93	93	93
Hours of Operation (hrs)	8,147	8,147	8,147	8,147	8,147	8,147
Electric Heat Rate, HHV (Btu/kWh)	8,987	8,933	8,897	8,720	8,547	8,461
Electric Efficiency, HHV (%)	37.97	37.93	38.35	39.13	39.92	40.33
Fuel Input (MMBtu/hr)	404.42	401.99	400.37	392.40	384.60	380.75
Thermal Output (MMBtu/hr)	137.50	136.68	136.13	133.42	130.76	129.45
Total CHP Efficiency (%)	71.97	72.20	72.35	73.13	73.92	74.33
Power to Thermal Output Ratio	1.12	1.12	1.13	1.15	1.17	1.19
Net Heat Rate (Btu/kWh)	5,168	5,137	5,116	5,014	4,914	4,865
Equipment Lifetime (years)(2)	35	35	35	35	35	35
Variable O&M Costs ($/kWh)(3)	0.0033	0.0033	0.0033	0.0032	0.0032	0.0031
Fixed O&M Costs ($/kW/year)(3)	14.65	14.65	14.65	14.65	14.65	14.65

(1) Based on GE LM6000 DLE.
(2) Service life is estimated to be 35 years (on average) by manufacturers, depending on duty cycle and proper maintenance with several minor and major engine overhauls during operating period, completed per manufacturer recommendations.
(3) Variable and fixed O&M costs represented in constant 2018 dollars.

Table 5-40.
Industrial Natural Gas Turbine Capital Costs – Reference New Equipment (1)
($/kW-AC)

Year	2015	2018	2020	2030	2040	2050
Equipment	471	470	465	456	447	442
Installation Labor and Materials	207	206	204	200	196	194
Engineering/Construction Management/Contingency (2)	169	169	167	164	161	159
Owners Costs	101	101	100	98	96	95
Total Installed Cost	**948**	**947**	**936**	**917**	**899**	**890**

(1) Costs are presented as constant 2018 dollars.
(2) Includes engineering, distributable costs, construction management, and start-up.

5.6.6 Advanced Technologies Projections

See the discussion in Section 5.1.6 – same assumptions apply.

Table 5-41.
45,000 kW Industrial Natural Gas Turbine Performance and O&M – Advanced New Equipment

Year	2015	2018	2020	2030	2040	2050
Output Capacity (kW-AC)	45,000	45,000	45,000	45,900	46,359	47,286
Capacity Factor (%)	93	93	93	93	93	93
Hours of Operation (hrs)	8,147	8,147	8,147	8,147	8,147	8,147
Electric Heat Rate, HHV (Btu/kWh)	8,987	8,897	8,533	7,584	6,826	6,826
Electric Efficiency, HHV (%)	37.97	38.36	40	45	50	50
Fuel Input (MMBtu/hr)	404.42	400.37	383.96	341.30	307.17	307.17
Thermal Output (MMBtu/hr)	137.50	136.13	130.55	116.04	104.44	104.44
Total CHP Efficiency (%)	71.97	72.35	74.0	79.0	84.0	84.0
Power to Thermal Output Ratio	1.12	1.13	1.18	1.32	1.47	1.47
Equipment Lifetime (years)(1)	35	35	35	35	35	35
Net Heat Rate (Btu/kWh)	5,168	5,116	4,906	4,361	3,925	3,925
Variable O&M Costs ($/kWh)(2)	0.0033	0.0033	0.0033	0.0030	0.0027	0.0027
Fixed O&M Costs ($/kW/year)(2)	14.65	14.65	14.65	14.65	14.65	14.65

(1) Service life is estimated to be 35 years (on average) by manufacturers, depending on duty cycle and proper maintenance with several minor and major engine overhauls during operating period, completed per manufacturer recommendations.
(2) Variable and fixed O&M costs represented in constant 2018 dollars.

Table 5-42.
45,000 kW Industrial Natural Gas Turbine Capital Costs – Advanced New Equipment (1)
($/kW-AC)

Year	2015	2018	2020	2030	2040	2050
Equipment	471	470	451	401	361	361
Installation Labor and Materials	207	206	198	176	158	158
Engineering/Construction Management/Contingency (2)	169	169	162	144	130	130
Owner Costs	101	101	97	86	78	78
Total Installed Cost	**948**	**947**	**908**	**807**	**727**	**727**

(1) Costs are presented in constant 2018 dollars. No change in manufacturing cost is projected for advanced technology performance improvement.
(1) Includes engineering, distributable costs, construction management, and start-up.

5.7 Industrial – Combined Cycle – 117,000 kW (ICC)

5.7.1 Equipment and Systems

The industrial 117-MW combined-cycle facility (ICC) is composed of two 45 MW aeroderivative-type turbine generator units and one 30-MW steam turbine generator. Figure 5-1 presents the ICC process flow diagram.

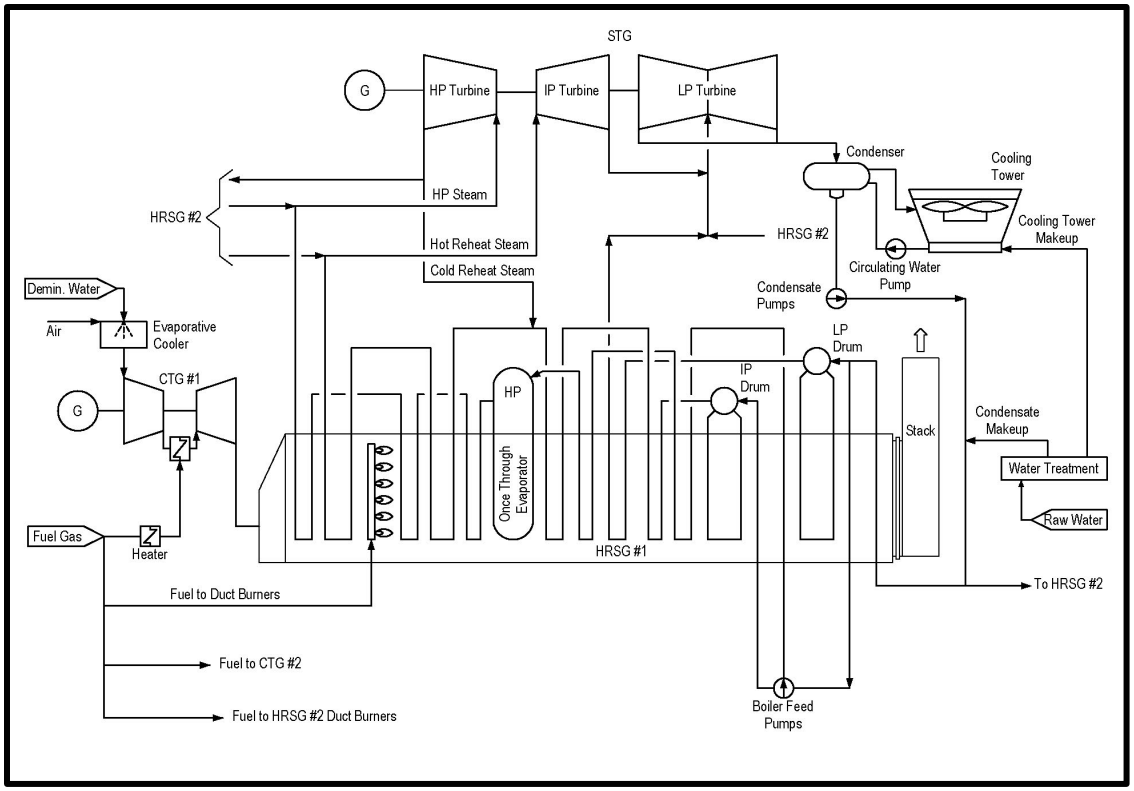

Figure 5-1. Industrial Combined Cycle Design Configuration

The ICC facility has two natural gas-fired combustion turbines in combined-cycle with a steam turbine generator Each electric generator is connected to a high-voltage bus in the facility switchyard via dedicated generator circuit breakers, GSUs, high-voltage circuit breakers, and one or more disconnect switches. The GSU increases the voltage from the electric generator voltage to the interconnected transmission system high voltage.

5.7.2 Technology Specifications

This design has two gas turbine generators at the ICC facility using aeroderivative technology commercially available in the marketplace. The turbine generators are rated at about 45 MW. The ICC facility has two natural gas turbines mechanically coupled with dedicated electric generators along with a nominally rated 30 MW steam turbine generator. For the gas turbines, the packaged generators are 60 Hz machines rated at 68.5 MVA with an output voltage of 13.8 kV. The STG is mechanically coupled with a dedicated generator with a nominal rating of about 22.5 MVA. The electric generators are connected to a high-voltage bus in the facility switchyard via dedicated generator circuit breakers, GSUs, high-voltage circuit breakers, and disconnect switches. The GSUs increase the voltage from the electric generators from 13.8 kV to interconnected transmission system high voltage. No form of carbon control is included in the design.

The ICC facility is controlled using a DCS. The DCS provides centralized control of the facility by integrating the control systems provided with the GT and associated electric generator and the control of BOP systems and equipment.

The technology specifications for the ICC are presented in Table 5-43:

Table 5-43.
Industrial – Combined Cycle – 117,000 kW-AC

Year	2018
Output Capacity (kW-AC)	117,000
Electric Heat Rate, HHV (Btu/kWh)	6,789
Electric Efficiency, HHV (%)	49.91
Fuel Input (MMBtu/hr)	610.97
Thermal Output (MMBtu/hr)	207.73
Total CHP Efficiency (%)	65.34
Power to Thermal Output Ratio	1.92
Net Heat Rate (Btu/kWh)	5,222
Equipment Lifetime (years)	35
Variable O&M Costs ($/kWh)	0.0024
Fixed O&M Costs ($/kW/year)	13.87

5.7.3 Capital Cost Estimate

The Cost Estimate for the ICC Facility with a nominal capacity of 117 MW-AC is $1,565/kW-AC.

The Cost Estimate for the ICC 117,000 kW assumes having a site near a transmission line and the end use. A 40-acre site is assumed to be required to be cleared, leveled, and conditioned to accept underground utilities such as water, gas, electric, sewage, and drainage, which are also found at large facilities. The ICC price was obtained from *Gas Turbine World 2019 TW Handbook Volume 34*. The equipment cost for the 117,000 kW machine was obtained from pricing of the same size unit, including freight delivery, to the site. The power arrangement consists of two aeroderivative gas turbines, two heat recovery steam generators, and one steam turbine rated at 30,000 kW. Peripheral electrical equipment necessary to complement the industrial power plant needs has been added to the estimate. The Cost Estimate includes site preparation, gas tapping costs, structures, equipment, electrical, cooling system, distributable cost, engineering and design, and subcontractor fee and budget contingency. All estimated costs are expressed in $/kW. All numbers in these estimates are based on prices and wages for the U.S. national average.

Table 5-44 summarizes the Cost Estimate categories for the ICC facility. The construction costs of the ICC are affected by the existing infrastructure that may be leveraged in the development, design, and construction.

Table 5-44.
Base Plant Site Capital Cost Estimate for ICC (2018)

Technology:	**ICC**
Nominal Capacity (ISO):	**117,000 kW-AC**
Nominal Heat Rate (ISO):	**8,353 Btu/kWh-HHV**

Capital Cost Category	($/kW-AC) (2018 $)
Equipment Supply	564
Installation – Labor and Materials	329
Engineering, Construction Management, and Contingency (1)	433
Total Project EPC	1,326
Owners Costs	239
Total Installed EPC Project Cost with Owner's Cost	**1,565**

(1) Includes engineering, distributable costs, construction management, and start-up.

5.7.4 O&M Cost Estimate

In addition to the general items discussed in the section of this report entitled *O&M Cost Estimate*, the IGT10 facility includes major maintenance on the turbine and electric generator about every six to eight years dependent upon the unit's capacity factor. O&M cost assumptions include labor, provisions for the completion of scheduled and unscheduled maintenance, and major maintenance costs. For the analysis, a capacity factor of 93% is assumed.

Table 5-45.
O&M Costs for ICC

Technology	ICC
Fixed O&M	$13.87/kW-year
Variable O&M	$0.0024/kWh

Fixed and Variable O&M source is: (1) review of Leidos in-house O&M data records, (2) original equipment manufacturer (OEM) recommendations, (3) cost-based estimating with assumed equipment reliability, and (4) survey of available literature as presented in Reference Section at the end of the report.

5.7.5 Reference Technologies Projections

Table 5-46.
117,000 kW Industrial Combined Cycle Performance and O&M – Reference New Equipment (1)

Year	2015	2018	2020	2030	2040	2050
Output Capacity (kW-AC)	117,000	117,000	117,000	117,000	117,000	117,000
Capacity Factor (%)	93	93	93	93	93	93
Hours of Operation (hrs)	8,147	8,147	8,147	8,147	8,147	8,147
Electric Heat Rate, HHV (Btu/kWh)	6,829	6,789	6,761	6,627	6,495	6,430
Electric Efficiency, HHV (%)	49.96	49.91	50.46	51.49	52.53	53.07
Fuel Input (MMBtu/hr)	614.65	610.97	608.51	596.40	584.53	578.68
Thermal Output (MMBtu/hr)	245.86	244.39	243.40	238.56	233.81	231.47
Total CHP Efficiency (%)	64.95	65.34	65.60	66.94	68.29	68.98
Power to Thermal Output Ratio	1.62	1.63	1.64	1.67	1.71	1.72
Net Heat Rate (Btu/kWh)	5,253	5,222	5,201	5,097	4,996	4,946
Equipment Lifetime (years)(2)	35	35	35	35	35	35
Variable O&M Costs ($/kWh)(3)	0.0024	0.0024	0.0024	0.0023	0.0023	0.0023
Fixed O&M Costs ($/kW/year)(3)	13.87	13.87	13.87	13.87	13.87	13.87

(1) ICC composed of two 45 MW aeroderivative type turbine generator units and one 30 MW steam turbine generator. Most likely used for power-only applications, but CHP is represented as possible with modifications.
(2) Service life is estimated to be 35 years (on average) by manufacturers, depending on duty cycle and proper maintenance with several minor and major engine overhauls and heat exchanger servicing during this operating period as completed per the manufacturer's recommendations.
(3) Variable and fixed O&M costs represented in constant 2018 dollars.

Table 5-47.
117,000 kW Industrial Combined Cycle Capital Costs – Reference New Equipment (1)
($/kW-AC)

Year	2015	2018	2020	2030	2040	2050
Equipment	565	564	558	547	536	525
Installation Labor and Materials	335	329	325	319	313	309
Engineering/Construction Management/Contingency (2)	435	433	428	420	411	407
Owner's Costs	241	239	236	232	227	225
Total Installed Cost	**1,576**	**1,565**	**1,548**	**1,518**	**1,487**	**1,466**

(1) Costs are presented as constant 2018 dollars.
(2) Includes engineering, distributable costs, construction management, and start-up.

5.7.6 Advanced Technologies Projections

Several studies regard NGCC (without carbon capture and storage) as a mature technology without significant cost savings forecast for units in future years;[76] however, advances continue to be made in the turbine design. The advanced combined-cycle units use G- or H-class turbines to achieve combined-cycle efficiencies exceeding 60%. DOE is continuing to sponsor turbine component R&D that could allow higher turbine inlet temperatures, better manage cooling requirements, minimize leakage, advance compressor and expander aerodynamics, advance the performance of high temperature load following combustion systems with low emissions of criteria pollutants including oxides of nitrogen (NOx), and overall lead to improved efficiency of the gas turbine machine in a combined cycle application. DOE Projects in this topic area include: research on pressure gain combustion systems, ceramic matrix composite components, and advanced turbine configurations for improved cooling and efficiency.[77]

For this size industrial NGCC technology, this assessment assumes a conservative advanced electric efficiency performance of 54% (HHV basis) by 2050 to ensure economically reliable performance for future industrial applications.

Table 5-48.
117,000 kW Industrial Combined Cycle Performance and O&M – Advanced New Equipment(1)

Year	2015	2018	2020	2030	2040	2050
Output Capacity (kW-AC)	117,000	117,000	117,000	117,000	117,000	117,000
Capacity Factor (%)	93	93	93	93	93	93
Hours of Operation (hrs)	8,147	8,147	8,147	8,147	8,147	8,147
Electric Heat Rate, HHV (Btu/kWh)	6,829	6,789	6,761	6,559	6,428	6,299
Electric Efficiency, HHV (%)	49.96	49.91	50.46	52.02	53.08	54.16
Fuel Input (MMBtu/hr)	614.65	610.97	608.51	590.31	578.51	566.94
Thermal Output (MMBtu/hr)	245.86	244.39	243.40	236.13	196.69	226.77
Total CHP Efficiency (%)	64.95	65.34	65.60	68.98	71.09	73.99
Power to Thermal Output Ratio	1.62	1.63	1.64	1.72	2.09	1.85
Net Heat Rate (Btu/kWh)	5,253	5,222	5,201	4,946	4,800	4,611
Equipment Lifetime (years)(1)	35	35	35	35	35	35
Variable O&M Costs ($/kWh)	0.0024	0.0024	0.0024	0.0023	0.0023	0.0022
Fixed O&M Costs ($/kW/year)	13.87	13.87	13.87	13.87	13.87	13.87

(1) ICC composed of two 45 MW aeroderivative type turbine generator units and one 30 MW steam turbine generator. Typically used power-only, but CHP is possible with modifications.
(2) Service life is estimated to be 35 years (on average) by manufacturers, depending on duty cycle and proper maintenance with several minor and major engine overhauls and heat exchanger servicing during this operating period as completed per the manufacturer's recommendations.
(3) Variable and fixed O&M costs represented in constant 2018 dollars.

[76] See Original EPRI data in Azevedo, I. P. Jaramillo, E. Rubin, and S. Yeh. *Modeling Technology Learning for Electricity Supply Technologies. Phase II Report to Electric Power Research Institute.* June 2013. Last accessed from: http://www.cmu.edu/epp/iecm/rubin/PDF%20files/2013/FINAL%20PHASE%20II%20REPORT%20TO%20EPRI_June%2030.pdf on April 22, 2015.
[77] National Energy Technology Laboratory, Advanced Combustion Turbines, R&D awards, https://www.netl.doe.gov/node/7551

Table 5-49.
117,000 kW Industrial Combined Cycle Capital Costs – Advanced New Equipment (1)
($/kW-AC)

Year	2015	2018	2020	2030	2040	2050
Equipment(1)	565	564	558	541	530	520
Installation Labor and Materials	335	329	325	319	313	309
Engineering/Construction Management/Contingency (2)	435	433	428	420	411	407
Owners Costs	241	239	236	232	227	225
Total Installed Cost	**1,576**	**1,565**	**1,548**	**1,512**	**1,481**	**1,461**

(1) Costs are presented as constant 2018 dollars.
(2) Includes engineering, distributable costs, construction management, and start-up. Assumes no change in values from reference values.

5.8 Industrial – Combined Cycle – 376,000 kW (ICC)

5.8.1 Equipment and Systems

The industrial 376 MW-AC combined-cycle facility (ICC) is composed of one 241 MW turbine generator unit and one 135 MW steam turbine generator. Figure 5.3 presents the ICC process flow diagram.

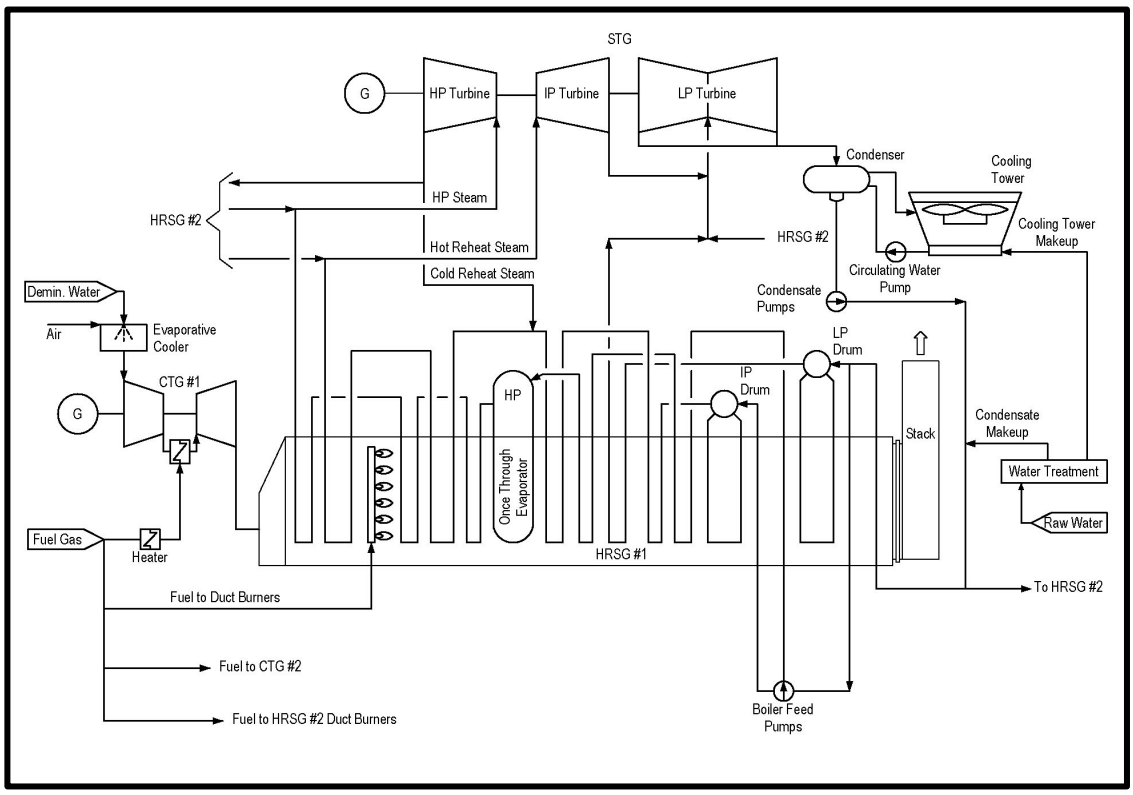

Figure 5-2. Industrial Combined Cycle Design Configuration

The ICC facility has one natural gas fired combustion turbine in combined-cycle with a steam turbine generator The electric generator is connected to a high-voltage bus in the facility switchyard via dedicated generator circuit breakers, GSUs, high-voltage circuit breakers, and one or more disconnect switches. The GSU increases the voltage from the electric generator voltage to the interconnected transmission system high voltage.

The ICC facility is controlled using a DCS. The DCS provides centralized control of the facility by integrating the control systems provided with the turbine and associated electric generator and the control of BOP systems and equipment.

5.8.2 Technology Specifications

There would be one gas turbine generator at the ICC facility using GE 7F.05 technology commercially available in the marketplace. The turbine generator is to be rated for about 241 MW. The ICC facility has one natural gas turbine mechanically coupled with dedicated electric generators along with a nominally rated 135 MW steam turbine generator. For the gas turbine, the packaged generators are 60 Hz machines rated at about 68.5 MVA with an output voltage of 13.8 kV. The STG would be mechanically coupled with a dedicated generator with a nominal rating of about 22.5 MVA. The electric generators are connected to a high-voltage bus in the facility switchyard via dedicated generator circuit breakers, GSUs, high-voltage circuit breakers, and disconnect switches. The GSUs increase the voltage from the electric generators from 13.8 kV to interconnected transmission system high voltage.

The ICC facility is controlled using a DCS. The DCS provides centralized control of the facility by integrating the control systems provided with the GT and associated electric generator and the control of BOP systems and equipment. The technology specifications for the ICC are presented below in Table 5-50:

Table 5-50.
Industrial – Combine Cycle – 376,000 kW-AC

Year	2018
Output Capacity (kW-AC)	376,000
Electric Heat Rate, HHV (Btu/kWh)	6,270
Electric Efficiency, HHV (%)	54.41
Fuel Input (MMBtu/hr)	1,523.70
Thermal Output (MMBtu/hr)	685.67
Total CHP Efficiency (%)	84.20
Power to Thermal Output Ratio	1.87
Net Heat Rate (Btu/kWh)	4,052
Equipment Lifetime (years)	35
Variable O&M Costs ($/kWh)	0.0016
Fixed O&M Costs ($/kW/year)	13.03

5.8.3 Capital Cost Estimate

The Cost Estimate for the ICC Facility with a nominal capacity of 376 MW-AC is $1,255/kW-AC.

The Cost Estimate for the ICC 376,000 kW assumes having a site near a transmission line and the end use. A 40-acre site is assumed to be required to be cleared, leveled, and conditioned to accept underground utilities such as water, gas, electric, sewage, and drainage, which are also found at large facilities. The ICC price was obtained from *Gas Turbine World 2019 TW Handbook Volume 34*. The equipment cost for the 376,000 kW machine was obtained from pricing of a 376,000 kW unit, plus freight delivery to the site. The power arrangement consists of one gas turbine, one heat recovery steam generator, and one steam turbine rated at 135,000 kW. Peripheral electrical equipment necessary to complement the industrial power plant needs has been added to the estimate. The Cost Estimate includes site preparation, gas tapping costs, structures, equipment, electrical, cooling system, distributable cost, engineering and design, and subcontractor fee and budget contingency. All estimated costs are expressed in $/kW. All numbers in these estimates are based on prices and wages for the U.S. national average.

Table 5-51 summarizes the Cost Estimate categories for the ICC facility. The construction costs of the ICC are affected by the existing infrastructure that may be leveraged in the development, design, and construction.

Table 5-51.
Base Plant Site Capital Cost Estimate for ICC (2018)

Technology: **ICC**
Nominal Capacity (ISO): **376,000 kW-AC**
Nominal Heat Rate (ISO): **8,353 Btu/kWh-HHV**

Capital Cost Category	($/kW-AC) (2018 $)
Equipment Supply	445
Installation – Labor and Materials	345
Engineering, Construction Management, and Contingency (1)	274
Total Project EPC	1,064
Owners Costs	**191**
Total Installed EPC Project Costs with Owner's Costs	**1,255**

(1) Includes engineering, distributable costs, construction management, and start-up.

5.8.4 O&M Cost Estimate

Table 5-52 presents the O&M costs for the ICC facility. In addition to the general items discussed in the section of this report entitled *O&M Cost Estimate*, the IGT10 facility includes major maintenance on the turbine and electric generator about every six years dependent upon the unit's capacity factor. O&M cost assumptions include labor, provisions for the completion of scheduled and unscheduled maintenance, and major maintenance costs. In addition, provisions have been estimated for maintenance required on the BOP and auxiliary systems. For the analysis, a CF of 93% was assumed.

Table 5-52.
O&M Costs for ICC

Technology	ICC
Fixed O&M	$13.03/kW-year
Variable O&M	$0.0016/kWh

Fixed and Variable O&M source is: (1) review of Leidos in-house O&M data records, (2) original equipment manufacturer (OEM) recommendations, (3) cost-based estimating with assumed equipment reliability, and (4) survey of available literature as presented in Reference Section at the end of the report.

5.8.5 Reference Technologies Projections

Table 5-53.
376,000 kW Industrial Combined Cycle Performance and O&M – Reference New Equipment(1)

Year	2015	2018	2020	2030	2040	2050
Output Capacity (kW-AC)	376,000	376,000	376,000	376,000	376,000	376,000
Capacity Factor (%)	93	93	93	93	93	93
Hours of Operation (hrs)	8,147	8,147	8,147	8,147	8,147	8,147
Electric Heat Rate, HHV (Btu/kWh)	6,364	6,270	6,301	6,175	6,053	5,992
Electric Efficiency, HHV (%)	53.61	54.41	54.51	55.25	56.37	56.94
Fuel Input (MMBtu/hr)	1,546.56	1,523.70	1,531.09	1,500.63	1,470.76	1,456.06
Thermal Output (MMBtu/hr)	695.95	685.67	688.99	675.28	661.84	655.23
Total CHP Efficiency (%)	82.95	84.20	84.20	85.49	87.23	88.11
Power to Thermal Output Ratio	1.84	1.87	1.86	1.90	1.94	1.96
Net Heat Rate (Btu/kWh)	4,113	4,052	4,072	3,991	3,912	3,872
Equipment Lifetime (years)(2)	35	35	35	35	35	35
Variable O&M Costs ($/kWh) (3)	0.0016	0.0016	0.0016	0.0016	0.0016	0.0016
Fixed O&M Costs ($/kW/year) (3)	13.03	13.03	13.03	13.03	13.03	13.03

(1) ICC composed of one 241 MW aeroderivative type turbine generator unit and one 135 MW steam turbine generator. Most likely used for power-only applications, but CHP is represented as possible with modifications.
(2) Service life is estimated to be 35 years (on average) by manufacturers, depending on duty cycle and proper maintenance with several minor and major engine overhauls and heat exchanger servicing during this operating period as completed per the manufacturer's recommendations.
(3) Variable and fixed O&M costs represented in constant 2018 dollars..

Table 5-54.
376,000 kW Industrial Combined Cycle Capital Costs – Reference New Equipment (1)
($/kW-AC)

Year	2015	2018	2020	2030	2040	2050
Equipment	452	445	444	438	430	425
Installation Labor and Materials	350	345	344	340	333	330
Engineering/Construction Management/Contingency (2)	278	274	273	270	264	262
Owners Costs	194	191	191	188	184	183
Total Installed Cost	**1,274**	**1,255**	**1,253**	**1,236**	**1,211**	**1,199**

(1) Costs are presented as constant 2018 dollars.
(2) Includes engineering, distributable costs, construction management, and start-up.

5.8.6 Advanced Technologies Projections

Several studies regard NGCC (without carbon capture and storage) as a mature technology without significant cost savings forecast for units in future years;[78] however, advances continue to be made in the turbine design. The advanced combined-cycle units use G- or H-class turbines to achieve combined-cycle efficiencies exceeding 60%. DOE is sponsoring turbine component R&D that could allow higher turbine inlet temperatures, better manage cooling requirements, minimize leakage, advance compressor and expander aerodynamics, advance the performance of high temperature load following combustion systems with low emissions of criteria pollutants, including oxides of nitrogen (NOx), and could lead to improved efficiency of the gas turbine machine in a combined cycle application. DOE Projects in this topic area include: research on pressure gain combustion systems, ceramic matrix composite components, and advanced turbine configurations for improved cooling and efficiency.[79]

Within the past two years, DOE has initiated new projects focused on a goal of 65% combined cycle efficiency (lower heating value basis or about 62% HHV basis):

- Develop advanced turbine technologies for hot-gas-path inlet components. This project will develop novel and innovative component airfoil and end-wall architectures that provide cooling-flow savings while maintaining component durability. Awarded to General Electric in April 2018.
- Create a gas turbine technology development program that develops mechanically feasible, emerging, aerodynamic, and heat-transfer technologies to optimize the entire turbine system and improve overall gas turbine cycle efficiency. Select conceptual design configurations that contribute to the 65 percent efficiency performance goal. Awarded to General Electric in April 2018.

[78] See Original EPRI data in Azevedo, I. P. Jaramillo, E. Rubin, and S. Yeh. *Modeling Technology Learning for Electricity Supply Technologies. Phase II Report to Electric Power Research Institute.* June 2013. Last accessed from: https://www.cmu.edu/epp/iecm/rubin/PDF%20files/2013/FINAL%20PHASE%20II%20REPORT%20TO%20EPRI_June%2030.pdf.

[79] National Energy Technology Laboratory, Advanced Combustion Turbines, R&D awards, https://www.netl.doe.gov/node/7551

- Create a prototype titanium aluminide-cooled turbine blade design that will increase the exit annulus of large-frame gas turbines and support a target combined cycle efficiency levels of 65 percent. Awarded to Siemens Energy will April 2018.
- Develop an optimized design for an advanced high-temperature combustor for gas turbine applications. Awarded to Siemens Energy will April 2018.

This assessment assumes a maximum electric efficiency performance of 59% (HHV basis) by 2050 to ensure economically reliable performance for future industrial applications.

Table 5-55.
376,000 kW Industrial Combined Cycle Performance and O&M – Advanced New Equipment(1)

Year	2015	2018	2020	2030	2040	2050
Output Capacity (kW-AC)	376,000	376,000	376,000	376,000	376,000	376,000
Capacity Factor (%)	93	93	93	93	93	93
Hours of Operation (hrs)	8,147	8,147	8,147	8,147	8,147	8,147
Electric Heat Rate, HHV (Btu/kWh)	6,364	6,270	6,301	6,022	5,902	5,784
Electric Efficiency, HHV (%)	53.61	54.41	54.51	56.66	57.81	59.00
Fuel Input (MMBtu/hr)	1,546.56	1,523.70	1,531.09	1463.37	1434.10	1405.42
Thermal Output (MMBtu/hr)	695.95	685.67	688.99	658.51	645.34	632.44
Total CHP Efficiency (%)	82.95	84.20	83.79	90.30	94.91	98.78
Power to Thermal Output Ratio	1.84	1.87	1.86	2.01	2.11	2.20
Net Heat Rate (Btu/kWh)	4,113	4,052	4,072	3,779	3,595	3,454
Equipment Lifetime (years)(1)	35	35	35	35	35	35
Variable O&M Costs ($/kWh)	0.0016	0.0016	0.0016	0.0015	0.0015	0.0015
Fixed O&M Costs ($/kW/year)	13.03	13.03	13.03	13.03	13.03	13.03

(1) ICC composed of one 241 MW aeroderivative type turbine generator unit and one 135 MW steam turbine generator. Most likely used for power-only applications, but CHP is represented as possible with modifications.
(2) Service life is estimated to be 35 years (on average) by manufacturers, depending on duty cycle and proper maintenance with several minor and major engine overhauls and heat exchanger servicing during this operating period as completed per the manufacturer's recommendations.
(3) Variable and fixed O&M costs represented in constant 2018 dollars..

Table 5-56.
376,000 kW Industrial Combined Cycle Capital Costs – Advanced New Equipment (1)
($/kW-AC)

Year	2015	2018	2020	2030	2040	2050
Equipment	452	445	444	427	419	411
Installation Labor and Materials)	350	345	344	340	333	330
Engineering/Construction Management/Contingency (2)	278	274	273	270	264	262
Owners Costs	194	191	191	188	184	183
Total Installed Cost	**1,274**	**1,255**	**1,253**	**1,225**	**1,200**	**1,186**

(1) Costs are presented in constant 2018 dollars.
(2) Includes engineering, distributable costs, construction management, and start-up. Assumes no change in values from reference values

5.9 Industrial – Battery Energy Storage (IBESS)

5.9.1 Equipment and Systems

This section describes the Industrial Battery Energy Storage (IBESS) system for which we have assumed an installed capacity of 840 kW-DC. The battery element is assumed to have a round-trip efficiency, inclusive of inverter and cell losses, of 87%. The initial installed energy capacity of the IBESS is assumed to be 1,630 kWh, equivalent to about two hours of storage at continuous discharge at rated capacity.

5.9.2 Technology Specifications

Adoption of energy storage for grid-connected applications has increased rapidly in recent years; however, the market is still early in the maturation cycle. As a result, equipment warranty terms and usage restrictions for the battery cells can vary significantly among vendors. Battery equipment warranties typically address workmanship and materials, but also include a performance component that seeks to limit the impact of energy storage capacity degradation, which has been previously discussed. A typical battery cell warranty will have a 10-year performance warranty guaranteeing about 60% energy capacity at the end of the term, assuming an average of one full charge and discharge cycle per day. Some warranties contain additional restriction on the average state of charge of the battery cell. With these warranty terms in mind, we have assumed 10 years as the lifetime for the battery cells/modules in 2018, with improvement to 20 years by 2050. String inverters typically have a 10 year warranty, with extensions available to cover 20 years total. For the string inverters, we have assumed 15 years as the warrantied lifetime. Therefore, as battery cells/modules lifetime exceeds that of the inverters in future years, they will need to be replaced to maintain system operation.

It has been assumed that the primary use of the IBESS will be for reduction in the peak facility electrical demand. It is common in such systems that the IBESS capacity is selected in such a way to optimize the economic benefit of the system while minimizing the installation cost; however it is typical that the IBESS capacity will increase with increasing peak demand. For this reason, it is expected that the installed IBESS capacity will increase at a rate commensurate with the electrical peak demand increases of the associated host facility in years 2020 through 2050.

For cost projections, we have considered battery cell cost reductions, achieved through manufacturing efficiency and refinements to the currently available battery chemistries, as the main drivers of cost reductions over time. In the reference technologies case, our projection assumes the use of NMC lithium-ion batteries as the basic cell chemistry.

The advanced technologies case assumes the introduction of new battery technologies and chemistries that enable further reduction in cost as well as reductions in the rate of energy capacity degradation. Flow battery and solid state storage technologies may be among those technologies that result in better performance and lower costs; however, these technologies are not commonly deployed in commercial applications at this time. Over time, technological or manufacturing innovations may drive the costs down far enough to enable wider adoption in the marketplace.

5.9.3 Capital Cost Estimate

Table 5-57.
Base Plant Site Capital Cost Estimate for IBESS Cost (2018)

Technology: IBESS
Nominal Capacity (ISO): 840 kW-DC
Nominal Heat Rate (ISO): N/A

Capital Cost Category	($/kW-DC) (2018 $)
Equipment Supply	1,952
Installation – Labor and Materials	558
Engineering, Construction Management, and Contingency (1)	308
Owner's Costs (included in above)	-
Total Installed EPC Project Cost with Owner's Cost	**2,818**

(1) Includes engineering, distributable costs, construction management, and start-up.

5.9.4 O&M Estimate

Table 5-58 presents the O&M costs for the IBESS system. The major areas for fixed O&M costs for a BESS include visual inspection and maintenance of the torque values of connections, the PCS, the fire detection or protection system, and the thermal management system. Battery modules themselves are maintained by the automated controls and require no additional maintenance unless there is a failure, which the controls will announce with an alarm. Variable O&M consists of augmentation of the energy storage elements (battery modules) as their capacity degrades. The following tables present the performance characteristics and cost projections for IBESS.

Table 5-58.
O&M Costs for CBESS (840 kW-DC)

Technology	RBESS
Fixed O&M	$270/kW per year
Variable O&M	$0.0053/kWh

Contractually based performance guarantees and other commercial terms will lead to truck rolls/preventative maintenance. FOM here is based on experience with commercial based contracts and operations. Variable O&M cost includes consideration for battery replenishment and inverter replacement.

5.9.5 Reference Technologies Projections

The following tables present the performance characteristics and cost projections for battery storage.

Table 5-59.
Industrial IBESS Performance and O&M – Reference New Equipment(1)

Year	2015	2018	2020	2030	2040	2050
Output Capacity (kW-DC)(2)	840	840	848	890	935	982
Cycles Per Day(3)	1.0	1.0	1.0	1.2	1.5	2.0
Annual Energy Degradation(4)	4.0	4.0	3.9	3.5	2.0	2.5
Battery Cell Life (years)(5)	10	10	10	12	13.5	16
Inverter Life (years)(6)	15	15	15	15	15	15
Variable O&M Costs ($/kWh) (7)	0.0053	0.0053	0.0053	0.0050	0.0048	0.0045
Fixed O&M Costs ($/kW/year) (7)	270	270	268	255	243	231

(1) Assumes new system installation across the projection period (not replacement cost).
(2) Output capacity growth assumes 0.5% growth[55] in addressable electrical load per year after 2018.
(3) One cycle is considered to be one complete round trip discharge and charge cycle. Increasing cycle capability in later years assumed to accompany technology improvements which lower degradation and improve performance.
(4) Assumes transition to alternative cell chemistries.
(5) Battery cells typically have a 10-year performance warranty after which time the energy capacity may be insufficient to perform the intended function. Assumes performance warranties will be improved to 16 years in 2050.
(6) String inverters typically have a 10 year warranty, with extensions available to cover 20 years total. For the string inverters, we have assumed 15 years as the warrantied lifetime.
(7) Variable and fixed O&M costs represented in constant 2018 dollars. Contractually based performance guarantees and other commercial terms t will lead to truck rolls / preventative maintenance. Fixed O&M is based on experience with commercial based contracts and operations. Variable O&M cost includes consideration for battery replenishment and inverter replacement.

Table 5-60.
Industrial IBESS Capital Costs – Reference New Equipment (1)
($/kW-DC)

Year	2015	2018	2020	2030	2040	2050
Equipment(2)	3,438	1,952	1,933	1,854	1,669	1,586
Installation Labor and Materials	592	558	553	525	503	476
Engineering/Construction Management/ Contingency(3)	308	308	305	290	277	263
Owners Costs(4)	0	0	0	0	0	0
Total Installed Cost	**4,338**	**2,818**	**2,791**	**2,669**	**2,449**	**2,325**

(1) Costs are presented in constant 2018 dollars. Assumes cost of new system installation across the projection period (not replacement cost).
(2) Real cost reduction assumed to be achieved through manufacturing efficiency and refinements to the currently available battery chemistries, as the main drivers of cost reductions over time.
(3) Includes engineering, distributable costs, construction management, and start-up.
(4) Assumed to be included in the equipment cost

5.9.6 Advanced Technologies Projections

Significant battery research and development programs are being conducted worldwide. The U.S. Department of Energy R&D programs have been covering advanced battery manufacturing, advanced membranes for next-generation batteries, advanced flow batteries, and new approaches to battery diagnostics.[74]

The following tables present the performance characteristics and cost projections for advanced IBESS. Cycle efficiency is assumed to increase at a faster rate compared with the reference case.

Table 5-61.
Industrial IBESS Performance and O&M – Advanced New Equipment(1)

Year	2015	2018	2020	2030	2040	2050
Output Capacity (kW-DC)(2)	840	840	848	890	935	982
Cycles Per Day(3)	1.0	1.0	1.0	1.5	2.0	2.5
Annual Energy Degradation(4)	4.0	4.0	3.9	3	2	1.5
Battery Cell Life (years)(4)	10	10	10	15	20	25
Inverter Life (years)(6)	15	15	15	15	15	20
Variable O&M Costs ($/kWh)	0.0053	0.0053	0.0053	0.0050	0.0048	0.0045
Fixed O&M Costs ($/kW-year)	270	270	268	255	243	231

(8) Assumes new system installation across the projection period (not replacement cost).
(9) Output capacity growth assumes 0.5% growth[55] in addressable electrical load per year after 2018.
(10) One cycle is considered to be one complete round trip discharge and charge cycle. Increasing cycle capability in later years assumed to accompany technology improvements which lower degradation and improve performance.
(11) Assumes transition to alternative cell chemistries.
(12) Battery cells typically have a 10-year performance warranty after which time the energy capacity may be insufficient to perform the intended function. Assumes performance warranties will be improved to 25 years in 2050.
(13) String inverters typically have a 10 year warranty, with extensions available to cover 20 years total. For the string inverters, we have assumed 15 years as the warrantied lifetime.
(14) Variable and fixed O&M costs represented in constant 2018 dollars. Contractually based performance guarantees and other commercial terms t will lead to truck rolls / preventative maintenance. Fixed O&M is based on experience with commercial based contracts and operations. Variable O&M cost includes consideration for battery replenishment and inverter replacement.

Table 5-62.
Industrial IBESS Capital Costs – Advanced New Equipment (1)
($/kW-DC)

Year	2015	2018	2020	2030	2040	2050
Equipment(2)	3,438	1,952	1,933	1,669	1,586	1,506
Installation Labor and Materials	592	558	553	503	476	452
Engineering/Construction Management/ Contingency(3)	308	308	305	277	263	240
Owners Costs(4)	0	0	0	0	0	
Total Installed Cost	**4,338**	**2,818**	**2,791**	**2,449**	**2,325**	**2,198**

(1) Costs are presented in constant 2018 dollars. Assumes cost of new system installation across the projection period (not replacement cost).
(2) Real cost reduction assumed to be achieved through manufacturing efficiency and refinements to the currently available battery chemistries, as the main drivers of cost reductions over time.
(3) Includes engineering, distributable costs, construction management, and start-up.
(4) Assumed to be included in the equipment cost

Section 6
CHP HEAT EXCHANGE EQUIPMENT

6.1 Introduction

This section of the report defines, specifies, and provides cost estimates for the CHP heat exchange equipment used to integrate the commercial and industrial CHP-ready energy supply technologies, detailed in Sections 4 and 5 respectively, with generic commercial buildings and industrial facilities that require hot water or process steam. The following sections describe these generic heat exchange systems.

6.1.1 Commercial and Industrial Reciprocating Engines CHP Heat Exchange System Description

In addition to the CHP-ready equipment supplied as a part of a standard reciprocating engine plant, the CHP heat exchange system for these plants includes additional heat exchangers whereby the secondary fluid (water) extracts heat from the charge air cooler, oil cooler, engine block cooler, and the engine exhaust. This heat extraction system is used to provide hot water for industrial process or commercial space heating applications. Also included in the reciprocating engine CHP system is one water pump supply, a water storage tank, additional ductwork to route the exhaust gas to the heat exchanger, and the associated piping, valves, instrumentation, and controls necessary to operate the fully integrated CHP system.

The reciprocating engine CHP heat exchange system described above is the same for each of the commercial and industrial reciprocating engine technologies, with the only difference being the size of the equipment, ductwork, piping, valves, and water flowrates. The charge air cooler, oil cooler, and engine block cooler are carbon steel counter flow, single pass shell and tube type heat exchangers. The exhaust gas heat exchanger is a stainless steel counter flow, two pass shell and tube type exchanger.

6.1.2 Commercial Fuel Cell and Natural Gas Turbines CHP Heat Exchange System Description

In addition to the CHP-ready equipment supplied as a part of a commercial fuel cell and standard small simple cycle gas turbine plants, the CHP heat exchange system for these commercial plants includes an additional heat exchanger whereby the secondary fluid (water) extracts heat from the fuel cell and gas turbine exhaust. This heat extraction system is used to provide hot water for process or space heating applications. Also included in this CHP heat exchange system is one water pump, a water storage tank, additional ductwork to route the exhaust gas to the heat exchanger, and the associated piping, valves, instrumentation, and controls necessary to operate the CHP system.

The CHP system described above is the same for each of the commercial gas turbine technologies, with the only difference being the size of the equipment, ductwork, piping,

valves, and water flowrates. For the commercial gas turbines, the waste heat exchanger is a stainless steel counter flow, two pass shell and tube type exchanger.

6.1.3 Industrial Simple Cycle Natural Gas Turbines CHP Heat Exchange System Description

In addition to the CHP-ready equipment supplied as a part of a standard simple cycle gas turbine plant, the CHP system for these industrial gas turbine plants includes an additional heat exchanger whereby the secondary fluid (water) extracts heat from the gas turbine exhaust which generates steam for industrial process applications. Also included in this CHP system is one water return pump, a water storage tank, additional ductwork to route the turbine exhaust gas to the heat exchanger, and the associated steam and water piping, valves, instrumentation, and controls necessary to operate the CHP system.

The CHP system described above is the same for each of the simple cycle industrial gas turbine systems, with the only difference being the size of the equipment, ductwork, piping, valves, and water flowrates. The CHP application for industrial gas turbines ranging in size from 4,600 kW to 45,000 kW uses a waste heat boiler that is coupled to the exhaust side of the gas turbine to use the exhaust heat to provide high temperature saturated steam. The tube material in the waste heat boiler is stainless steel.

6.1.4 Industrial Combined Cycle Natural Gas Turbines CHP System Description

In addition to the equipment supplied as a part of a standard combined cycle gas turbine plant, the CHP system for the combined cycle plants includes an additional water-to-water heat exchanger which transfers heat from the condenser cooling water system to a secondary water system to provide 110° F water for low temperature process or heating applications. Also included in this CHP system is one water return pump, a water storage tank, and the associated water piping, valves, instrumentation, and controls necessary to operate the CHP system.

The CHP system described above is the same for each of the combined cycle industrial gas turbine systems with the only difference being the size of the equipment, piping, valves, and water flowrates. The CHP application for industrial gas turbines ranging in size from 117,000 kW to 376,000 kW uses a water-to-water counter flow, two pass shell and tube heat exchanger to capture heat from the condensing water circuit. The tube material in the heat exchanger is stainless steel.

6.2 CHP Heat Exchange Equipment Specification

CHP heat exchange equipment is specified for generic commercial and industrial applications to provide hot water or steam for process or space heating. These specifications are provided below in Table 6-1, which are additional to the equipment descriptions provided in the prior Section 6.1.

Table 6-1.
CHP Technology Generic Heat Exchanger Specifications

CHP TECHNOLOGY	NOMINAL SYSTEM CAPACITY	EXHAUST GAS HEAT EXCHANGE EQUIPMENT APPLICATION TYPE	GENERAL DESIGN SPECIFICATIONS
Commercial – Fuel Cell (CFC)	250 kW-AC	250 kW CFC unit is optimized for power production; Hot Water for process or space heating applications; gas-to-water heat exchangers; 120° F water output temperature	The exhaust waste heat exchanger size is 750,000 Btu/hr. See Section 6.1.2.
Commercial – Natural Gas Reciprocating Engine (CNE)	373 kW-AC	Hot Water for process or space heating applications; water and gas-to-water heat exchangers; 300° F water output temperature	Block cooler heat exchanger size is 875,000 Btu/hr; Charge air cooler heat exchanger size is 220,000 Btu/hr; Exhaust heat exchanger size is 1,100,000 Btu/hr. See Section 6.1.1.
Commercial – Oil Reciprocating Engine (COE)	350 kW-AC	Hot Water for process or space heating applications; water and gas-to-water heat exchangers; 300° F water output temperature	Block cooler heat exchanger size is 870,000 Btu/hr; Charge air cooler heat exchanger size is 210,000 Btu/hr; Exhaust heat exchanger size is 1,000,000 Btu/hr. See Section 6.1.1.
Commercial – Natural Gas Turbine (CNT)	1,210 kW-AC	Hot Water for process or space heating applications; gas-to-water heat exchangers; 200° F water output temperature	The exhaust waste heat exchanger size is 5,100,000 Btu/hr. See Section 6.1.2.
Commercial – Natural Gas Microturbine (CNM)	200 kW-AC	Hot Water for process or space heating applications; gas-to-water heat exchanger; 200° F water output temperature	The exhaust waste heat exchanger size is 800,000 Btu/hr. See Section 6.1.2.
Industrial – Natural Gas Reciprocating Engine (IRE1)	1,200 kW-AC	Hot Water for process or space heating applications; water and gas-to-water heat exchangers; 300° F water output temperature	Block cooler heat exchanger size is 2,100,000 Btu/hr; Charge air cooler heat exchanger size is 400,000 Btu/hr; Exhaust heat exchanger size is 1,900,000 Btu/hr. See Section 6.1.1.
Industrial – Natural Gas Reciprocating Engine (IRE3)	3,000 kW-AC	Hot Water for process or space heating applications; water and gas-to-water heat exchangers; 300° F water output temperature.	Block cooler heat exchanger size is 3,700,000 Btu/hr; Charge air cooler heat exchanger size is 7,500,000 Btu/hr; Oil cooler heat exchanger size is 1,900,000 Btu/hr; Exhaust heat exchanger size is 4,100,000 Btu/hr. See Section 6.1.1.

CHP TECHNOLOGY	NOMINAL SYSTEM CAPACITY	EXHAUST GAS HEAT EXCHANGE EQUIPMENT APPLICATION TYPE	GENERAL DESIGN SPECIFICATIONS
Industrial – Natural Gas Turbine (IGT5)	4,600 kW-AC	Process Steam; 200 psig saturated steam; Unfired heat recovery steam generator	The exhaust waste heat boiler size is 25,000,000 Btu/hr. See Section 6.1.3.
Industrial – Natural Gas Turbine (IGT10)	10,360 kW-AC	Process Steam; 200 psig saturated steam; Unfired heat recovery steam generator	The exhaust waste heat boiler size is 42,000,000 Btu/hr. See Section 6.1.3.
Industrial – Natural Gas Turbine (IGT25)	23,200 kW-AC	Process Steam; 400 psig saturated steam; Unfired heat recovery steam generator	The exhaust waste heat boiler size is 92,000,000 Btu/hr. See Section 6.1.3.
Industrial – Natural Gas Turbine (IGT45)	45,000 kW-AC	Process Steam; 400 psig saturated steam; unfired heat recovery steam generator	The exhaust waste heat boiler size is 136,000,000 Btu/hr. See Section 6.1.3.
Industrial – Combined Cycle (ICC)	117,000 kW-AC	Hot Water for process or space heating applications; water-to-water heat exchanger; 110° F water output temperature	The exhaust heat exchanger size is 5,300,000 Btu/hr. See Section 6.1.4.
Industrial – Combined Cycle (ICC)	376,000 kW-AC	Hot Water for process or space heating applications; water-to-water heat exchanger; 110° F water output temperature	The exhaust heat exchanger size is 23,000,000 Btu/hr. See Section 6.1.4.

6.3 CHP Heat Exchange Equipment Cost Estimation

This section provides CHP heat exchange equipment capital cost estimates (2018 dollars) for the applications specified in Table 6-1. Given the long-time design and manufacturing history of this type of heat exchange equipment components, we are not projecting adjustments to these costs (on a constant dollar basis) as applied to both the reference case and advanced case applications. Pricing for the CHP equipment was obtained from the 2014 Richardson Engineering Cost Database for "Process Plant Construction Estimating Standards" and escalated to 2018 dollars using the 2019 RSMeans® Construction Cost Indexes.

Variable and fixed O&M costs are already assumed to be reasonably incorporated into those O&M estimates provided in Sections 4 and 5 of this report.

6.3.1 Commercial and Industrial Reciprocating Engines CHP Heat Exchange System Capital Costs

The heat exchange equipment capital costs presented in this section are additive to the respective reciprocating engine technology capital costs presented in Sections 4 and 5

for generic CHP applications. Performance specifications are assumed to match those of the respective reciprocating engine technologies based on recommended equipment manufacturer maintenance practices.

Table 6-2.
Reciprocating Engine Heat Exchange Equipment Capital Costs – New Equipment (1)
(2018 $/kW)

	Commercial	Commercial	Industrial	Industrial
Capital Cost Category	**Natural Gas Reciprocating Engine**	**Oil Reciprocating Engine**	**Natural Gas Reciprocating Engine**	**Natural Gas Reciprocating Engine**
	373 kW	**350 kW**	**1,210 kW**	**3,000 kW**
Equipment	202	215	76	37
Installation Labor and Materials	61	65	23	11
Engineering/Construction Management/Contingency(2)	21	22	8	4
Owners Costs	26	28	10	5
Total Installed Cost ($/kW)	**310**	**330**	**117**	**57**

(1) Costs presented are in constant 2018 dollars. Assumes cost of new system installation across the projection period through 2050 (not replacement cost).
(2) Includes engineering, distributable costs, construction management, and start-up. Included in installation costs.

6.3.2 Commercial Fuel Cell and Natural Gas Turbines CHP Heat Exchange System Capital Costs

The heat exchange equipment capital costs presented in this section are additive to the respective fuel cell and gas turbine technology capital costs presented in Section 4 for generic CHP applications. Performance specifications are assumed to match those of the respective fuel cell and gas turbine technologies based on recommended equipment manufacturer maintenance practices.

Table 6-3.
Commercial Fuel Cell and Natural Gas Turbine Heat Exchange Equipment Capital Costs – New Equipment (1) (2018 $/kW)

	Commercial	Commercial	Commercial
Capital Cost Category	**Fuel Cell**	**Natural Gas Turbine**	**Natural Gas Micro-Turbine**
	250 kW	**1,210 kW**	**200 kW**
Equipment	266	89	289
Installation Labor and Materials	80	27	87
Engineering/Construction Management/Contingency(2)	28	9	30
Owners Costs	35	12	38
Total Installed Cost ($/kW)	**409**	**137**	**444**

(1) Costs presented are in constant 2018 dollars. Assumes cost of new system installation across the projection period through 2050 (not replacement cost).
(2) Includes engineering, distributable costs, construction management, and start-up. Included in installation costs.

6.3.3 Industrial Simple Cycle Natural Gas Turbine CHP Heat Exchange System Capital Costs

The heat exchange equipment capital costs presented in this section are additive to the respective gas turbine technology capital costs presented in Section 5 for generic CHP applications. Performance specifications are assumed to match those of the respective gas turbine technologies based on recommended equipment manufacturer maintenance practices.

Table 6-4.
Industrial Natural Gas Turbine Heat Exchange Equipment Capital Costs – New Equipment (1) (2018 $/kW)

	Industrial	Industrial	Industrial	Industrial
Capital Cost Category	**Natural Gas Turbine**	**Natural Gas Turbine**	**Natural Gas Turbine**	**Natural Gas Turbine**
	4,600 kW	**10,360 kW**	**23,200 kW**	**45,000 kW**
Equipment	200	153	141	127
Installation Labor and Materials	60	46	42	38
Engineering/Construction Management/Contingency(2)	21	16	15	13
Owners Costs	26	20	18	16
Total Installed Cost ($/kW)	**307**	**235**	**216**	**194**

(1) Costs presented are in constant 2018 dollars. Assumes cost of new system installation across the projection period through 2050 (not replacement cost).
(2) Includes engineering, distributable costs, construction management, and start-up. Included in installation costs.

6.3.4 Industrial Combined Cycle Natural Gas Turbines CHP Heat Exchange System Capital Costs

The heat exchange equipment capital costs presented in this section are additive to the respective combined cycle gas turbine technology capital costs presented in Section 5 for generic CHP applications. Performance specifications are assumed to match those of the respective combined cycle gas turbine technologies based on recommended equipment manufacturer maintenance practices.

This estimate assumes that extraction steam from the system's heat recover steam generator is available for utilization, and already accounted for in the system costs presented in Section 5. Table 6-5 is accounting for the additional cost of the CHP low-temperature water-to-water heat exchanger which transfers heat from the condenser cooling water system to a secondary water system to provide 110° F water for low temperature process or heating applications. This equipment is substantially less expensive than the water-steam heat exchanger being estimated for the simple cycle gas turbines.

Table 6-5.
Industrial Combined Cycle Heat Exchange Equipment Capital Costs – New Equipment (1)
(2018 $/kW)

	Industrial	Industrial
Capital Cost Category	**Combined Cycle Natural Gas Turbine**	**Combined Cycle Natural Gas Turbine**
	117,000 kW	**376,000 kW**
Equipment	10	8
Installation Labor and Materials	3	2
Engineering/Construction Management/Contingency(2)	1	1
Owners Costs	1	1
Total Installed Cost ($/kW)	**15**	**12**

(1) Costs presented are in constant 2018 dollars. Assumes cost of new system installation across the projection period through 2050 (not replacement cost).
(2) Includes engineering, distributable costs, construction management, and start-up. Included in installation costs.

Appendix A
ACRONYMS

AFC	Alkaline fuel cell
AC	Alternating current
ARES	Advanced reciprocating engine system
BESS	Battery energy storage system
BMS	Battery management system
BOP	Balance-of-Plant
BOS	Balance-of-System
BS	Battery storage
BSMU	Battery string management unit
Btu	British thermal unit
Btu/kWh	British thermal unit per kilowatt-hour
Btu/lb	British thermal unit per pound
Btu/scf	British thermal unit per standard cubic feet
C_2H_6	Ethane
C_3H_8	Propane
C_4H_{10}	*n*-Butane
CBESS	Commercial battery energy storage
CC	Combined cycle
CdTe	Cadmium Telluride
CF	Capacity factor
CFC	Commercial fuel cell
CH_4	Methane
CHP	Combined heat and power
CIGS	Copper Indium Gallium Diselenide
CLS	Commercial large solar photovoltaic system
CNE	Commercial – Natural gas engine
CNM	Commercial – Natural gas microturbine
CNT	Commercial – Natural gas turbine
CO	Carbon Monoxide
CO_2	Carbon Dioxide
COE	Commercial – Oil reciprocating engine
Cost Estimate	Base capital cost estimate
CSS	Commercial – Small solar photovoltaic system
CT	Combustion turbine
CTG	Combustion turbine and generator
CTM	Cell-to-Module
CWS	Commercial – Wind system
CxHy	General hydrocarbon
°	Degree
°C	Degrees Celsius
°F	Degrees Fahrenheit

DC	Direct current
DCS	Distributed control system
DG	Distributed generation
DMFC	Direct Methanol Fuel Cell
DOE	U.S. Department of Energy
EERE	DOE's Energy Efficiency and Renewable Energy
EIA	U.S. Energy Information Administration
EMM	Electricity Market Module
EPA	U.S. Environmental Protection Agency
EPC	Engineering, procurement and construction
EPRI	Electric Power Research Institute
FOM	Fixed O&M
GDP	Gross Domestic Product
GSU	Generator step-up transformer
HHV	Higher Heating Value
HRSG	Heat recovery steam generator
Hz	Hertz
IBESS	Industrial battery energy storage system
ICC	Industrial – Combined Cycle
IGT5	Industrial – Natural Gas Turbine
IGT10	Industrial – Natural Gas Turbine – 10,000 kW
IGT25	Industrial – Natural Gas Turbine – 25,000 kW
IGT40	Industrial – Natural Gas Turbine – 40,000 kW
IRE1	Industrial – Reciprocating engine-1
IRE3	Industrial – Reciprocating engine-3
ISO	International Standard Organization
kg	Kilograms
KJ	Kilojoules
kJ/kg	Kilojoules per kilogram
kV	Kilovolt
kW	Kilowatt
kWh	Kilowatt-hour
lb	Pound
LCOE	Levelized cost of energy
Leidos	Leidos Engineering, LLC
LFP	Lithium Iron Phosphate
LHV	Lower Heating Value
LID	Light-induced degradation
LMO	Lithium Cobalt Oxide
MCFC	Molten carbonate fuel cells
MJ	Megajoules
MJ/scm	Megajoules per standard cubic meter
MM	Millimeters
MMBtu	Million Btu
MMRF	Major maintenance reserve fund
MMU	Module management unit

MVA	Mega-volt-amperes
MW	Megawatt
MWh	Megawatt-hour
N_2	Nitrogen
NCA	Nickel Cobalt Aluminum
NEMS	National Energy Modeling System
NETL	DOE's National Energy Technology Laboratory
NGCC	Natural gas combined cycle
NH_3	Ammonia
NMC	Nickel Manganese Cobalt
NO_X	Nitrogen Oxides
NREL	DOE's National Renewable Energy Laboratory
O&M	Operation and maintenance
ORNL	Oak Ridge National Laboratory
PAFC	Phosphoric Acid Fuel Cell
PCS	Power Conversion System
PEMFC	Proton Exchange Membrane Fuel Cell
PPI	Producer Price Index
psig	Pounds per square inch gauge
PV	Photovoltaic
RBESS	Residential battery energy storage
RFC	Residential fuel cell system
RPM	Revolutions per minute
RSS	Residential small solar photovoltaic
RWS	Residential wind system
scf	Standard cubic feet
scm	Standard cubic meters
SCR	Selective catalytic reduction
SOFC	Solid oxide fuel cell
ST	Steam turbine
STG	Steam turbine and generator
VOM	Variable operating and maintenance
$/kW/year	U.S. dollars per installed kilowatt capacity per year

Appendix B
References

Azevedo, I. P. Jaramillo, E. Rubin, and S. Yeh. (2013). *Modeling Technology Learning for Electricity Supply Technologies. Phase II Report to Electric Power Research Institute. June 2013*. http://www.cmu.edu/epp/iecm/rubin/PDF%20files/2013/FINAL%20PHASE%20II%20REPORT%20TO%20EPRI_June%2030.pdf

Bloomberg BNEF, Business Council for Sustainable Energy (BCSE). (2019). *2019 Sustainable Energy in America Factbook.* http://www.bcse.org/factbook/

Bloomberg NEF. (2019). "A Behind the Scenes Take on Lithium-ion Battery Prices." https://about.bnef.com/blog/behind-scenes-take-lithium-ion-battery-prices/

Bloom Energy Product Datasheets. https//www.bloomenergy.com/resources.

Cadmus Group, Inc. (2012). Memorandum: Cadmus Group to PacifiCorp re: Revised Overview of SHP Input Data Sources and Potential Study Results. https://www.pacificorp.com/content/dam/pacificorp/doc/Energy_Sources/Integrated_Resource_Plan/2013IRP/2013IRP_CHP-Memo-LCOEexcel_10-04-12.pdf

Capstone Turbine Corporation. (2017). *Capstone C200S Power Package Data Sheet:* https://d1io3yog0oux5.cloudfront.net/_a18bd7dbecf278ca9ac57c33881eda75/capstoneturbine/db/235/7017/file/C200S+ICHP+HPNG_331148A_lowres.pdf

Capstone Turbine Corporation. Press Releases: (2015). "Capstone Flattens Organizational Structure to Lower Cost, Increase Adaptability as well as Foster Innovation and Creativity." April 10, 2015. http://www.capstoneturbine.com/news/story.asp?id=760

Capstone Turbine Corporation (2011). *High Efficiency Microturbine with Integral Heat Recovery.* Presented at the DOE Industrial Distributed Energy Portfolio Review Meeting on June 1-2, 2011. https://www.energy.gov/sites/prod/files/2013/11/f4/integral_heat_nourse.pdf

Caterpillar, Inc. (2018). *Caterpillar Gas Generator Set Product Ratings Summary.* https://s7d2.scene7.com/is/content/Caterpillar/CM20180601-30390-17734

Chubu Electric Power Co. *et al.* (2005). *Technical and Economic Assessment: Off Grid, Mini-Grid and Grid Electrification Technologies: Summary Report.* Prepared for Energy Unit, Energy and Water Department, The World Bank. http://documents.albankaldawli.org/curated/ar/634581468333897517/Technical-and-economic-assessment-of-off-grid-mini-grid-and-grid-electrification-technologies

Clarke Energy. (2019). *GE's Jenbacher Gas Engines.* http://www.clarke-energy.com/gas-engines/

Clean Technica. (2015). "How Efficient will Solar PV Be in the Future? 10-Year Predictions for the Industry." https://cleantechnica.com/2017/08/15/efficient-will-solar-pv-future-10-year-predictions-industry/

Doosan Fuel Cell America, Inc. (2018). *Doosan PureCell Model 400 Datasheet.* http://www.doosanfuelcell.com/download/pdf/catalog/pafc-400kw_us_en.pdf

E4tech. (2018). *The Fuel Cell Industry Review 2018.* http://www.fuelcellindustryreview.com/

Energysage website. *The Impact of the Solar Tariff on Prices.* https://news.energsage.com/2018-us-solar-tariff-impact-prices

Executive Office of the President of the United States. (2018) *Section 201 Cases: Imported Large Residential Washing Machines and Imported Solar Cells and Modules*. https://ustr.gov/sites/default/files/files/Press/fs/201%20Cases%20Fact%20Sheet.pdf

FlexEnergy. (2011). Presentation to Federal Utility Partnership Working Group on October 25, 2011. https://www1.eere.energy.gov/femp/pdfs/fupwg_fall11_report.pdf.

Friedman, Jack P. (2012). *Dictionary of Business and Economics Terms.* Dictionary of Business and Economics Terms | Book by Jack P. Friedman Ph.D. | Official Publisher Page | Simon & Schuster

Fuel Cell Today. (2019) Fuel Cell Today, the leading authority on fuel cells

FuelCellsWorks. (2019). Home - FuelCellsWorks

Gas Turbine World. (various). *Gas Turbine World Handbook, 2013, 2015, 2018, and 2019 Editions.* https://gasturbineworld.com/product-category/annual-handbook/

Gas Turbine World. (2019). *2019 Handbook, Volume 34.* https://gasturbineworld.com/shop/annual-handbook/2019-handbook-volume-34/

GE Aviation. (2015). "GE Successfully Tests World's First Rotating Ceramic Matrix Composite Material for Next-Gen Combat Engine." Press Center. February 10, 2015. http://www.geaviation.com/press/military/military_20150210.html.

The Gordian Group. (2018). *RSMeans Historical Cost Indices.* https://www.rsmeansonline.com/references/unit/refpdf/hci.pdf

GTM website. (2019). *Bifacial Modules Win Reprieve from US Solar Tariffs.* https://www.greentechmedia.com/articles/read/bifacial-modules-win-reprieve-from-u-s-solar-tariffs

GTM website. (2018). *Trump Administration Issues 30% Solar Panel Import Tariff.* https://www.greentechmedia.com/articles/read/breaking-trump-admin-issues-a-30-solar-tariff

Itron, Inc. (2011). *CPUC Self-Generation Incentive Program: Cost Effectiveness of Distributed Generation Technologies-Final Report.* https://www.pge.com/includes/docs/pdfs/shared/newgenerator/selfgeneration/SGIP_CE_Report_Final.pdf

Kalam, A., A. King, E. Moret, and U. Weerasinghe.(2012). "Combined heat and power systems: economic and policy barriers to growth." *Chemistry Central Journal*. 2012, 6(Suppl 1)S3. http://journal.chemistrycentral.com/content/6/S1/S3.

Lazard. (2018). *"Lazard's Levelized Cost of Energy Analysis—Version 12.0."* https://www.lazard.com/media/450784/lazards-levelized-cost-of-energy-version-120-vfinal.pdf.

Lawrence Berkeley National Laboratory. (2018). *Tracking to Sun-Installed Price Trends for Distributed Photovoltaic Systems in the United States-2018 Edition*. https://emp.lbl.gov/publications/tracking-sun-installed-price-trends

National Institute of Building Sciences. Barney L. Capehart, PhD, CEM. (2016) *Whole Building Design Guide: Microturbines. August 31, 2010*. http://www.wbdg.org/resources/microturbines.php

National Renewable Energy Laboratory. (2010). *Cost and Performance Assumptions for Modeling Electricity Generation Technologies.* https://www.nrel.gov/news/program/2018/updated-baseline-cost-and-performance-data-for-electricity-generation-technologies.html

National Renewable Energy Laboratory (2013). *Small Wind Electric Systems, An Indiana Consumers Guide*, https://www.nrel.gov/docs/fy05osti/37710.pdf

National Renewable Energy Laboratory. (2008). *20% Wind Energy by 2030: Increasing Wind Energy's Contribution to U.S. Electricity Supply*. July 2008. DOE/GO-102008-2567. http://www.nrel.gov/docs/fy08osti/41869.pdf

Pacific Northwest National Laboratory. (2003). *Mini Climate Assessment Model: Data from Model Documentation for the MiniCAM.* https://www.pnnl.gov/main/publications/external/technical_reports/PNNL-14337.pdf

PVEducation. https://www.pveducation.org/

PV Magazine. (2019). *"2019 PV installations to hit 123 GW, global balance shifting, says HIS Markit"*. https://www.pv-magazine.com/2018/12/19/2019-pv-installations-to-hit-123-gw-global-balance-shifting-says-ihs/

PV Magazine: "Solar panel theoretical efficiency limit increases by 33%". https://www.pv-magazine.com/2018/10/17/solar-panel-theoretical-efficiency-limit-increases-by-33/

Smithsonian National Museum of Natural History. (2017). *Fuel Cell Basics.* http://americanhistory.si.edu/fuelcells/basics.htm

Solar Energy Industries Association. *Solar Energy Industries Association First Quarter Study.* https://www.seia.org/

Solar Energy Industries Association. (2019). *Solar Market Insight Report: 2018 Year in Review.* https://www.seia.org/research-resources/solar-market-insight-report-2018-year-review

U.S. Department of Energy. (2013). *2012 Market Report on Wind Technologies in Distributed Applications.* http://www1.eere.energy.gov/wind/pdfs/2012_distributed_wind_technologies_market_report.pdf

U.S. Department of Energy. (2012). *2012 Wind Technologies Market Report, Energy Efficiency & Renewable Energy.* https://www1.eere.energy.gov/wind/pdfs/2012_wind_technologies_market_report.pdf

U.S. Department of Energy. (2014). *2013 Distributed Wind Market Report*, http://energy.gov/eere/wind/downloads/fact-sheet-2013-distributed-wind-market-report

U.S. Department of Energy. (2018). 2*017 Distributed Wind Market Report.* https://www.energy.gov/eere/wind/downloads/2017-distributed-wind-market-report

U.S. Department of Energy. (2018). *2018 Distributed Wind Market Report Overview Sheet,* May 2019. https://www.energy.gov/sites/prod/files/2019/05/f62/2018-distributed-wind-market-report-overview.pdf

U.S. Department of Energy. (2015). *Advanced Reciprocating Engine System (ARES).* https://www.energy.gov/sites/prod/files/2017/01/f34/0419-Recip%20Engine%20Brochure%20121916_compliant.pdf

U.S. Department of Energy. (2013). *Combined Heat and Power Database*, ICF International, July 25, 2013.http://www.eea-inc.com/chpdata/

U.S. Department of Energy. (2016). *Fuel Cell Technologies Market Report 2016.* https://www.energy.gov/sites/prod/files/2017/10/f37/fcto_2016_market_report.pdf

U.S. Department of Energy. (2013). *Fuel Cell Technologies Office Multi-Year Research, Development, and Demonstration Plan.* https://www.energy.gov/eere/fuelcells/downloads/fuel-cell-technologies-office-multi-year-research-development-and-22

U.S. Department of Energy. (2008). *ITP Industrial Distributed Energy: Combined Heat and Power: Effective Energy Solutions for a Sustainable Future.* https://www.energy.gov/eere/wipo/downloads/itp-industrial-distributed-energy-combined-heat-and-power-effective-energy

U.S. Department of Energy. (2013). *State of the States: Fuel Cells in America 2013*. https://www.energy.gov/sites/prod/files/2014/03/f12/state_of_the_states_2013.pdf

U.S. Energy Information Administration. (2019). *Annual Energy Outlook 2019*. https://www.eia.gov/outlooks/aeo/pdf/aeo2019.pdf

U.S. Energy Information Administration. (2014). *Distributed Generation System Characteristics and Costs in the Buildings Sector*. http://www.eia.gov/analysis/studies/distribgen/system/

U.S. Environmental Protection Agency. (2006). *Environmental Technology Verification Program: Microturbines and Combined Heat and Power Technologies*. https://cfpub.epa.gov/si/si_public_record_report.cfm?Lab=NRMRL&dirEntryId=160627

U.S. Environmental Protection Agency. (2011). *AP-42, Vol.1, 3:2 Natural Gas-Fired Reciprocating Engines*. http://www.epa.gov/ttnchie1/ap42/ch03/final/c03s02.pdf

Varley, J. (2014). "GE's new all-air-cooled H class turbine." Modern Power Systems. http://www.modernpowersystems.com/features/featureges-new-all-air-cooled-h-class-turbine-4212530/

Wiser, Ryan. (2013). "Wind Energy Cost, Performance and Pricing Trends: Past & Future." Part of the State-Federal RPS Collaborative Webinar on December 17, 2013. Sponsored by CleanEnergy States Alliance. https://www.cesa.org/assets/Uploads/Wiser-2013-RPS-Summit-Presentation.pdf

Appendix C
Technology Definitions and Calculations

Key Terms Used in Calculating CHP Efficiency – EPA Guidelines[80]

Calculating a CHP system's efficiency requires an understanding of several key terms, described below.

CHP system. The CHP system includes the unit in which fuel is consumed (e.g., turbine, boiler, or engine), the electric generator, and the heat recovery unit that transforms otherwise wasted heat to useable thermal energy.

- **Total fuel energy input (QFUEL).** The thermal energy associated with the total fuel input. Total fuel input is the sum of all the fuel used by the CHP system. The total fuel energy input is often determined by multiplying the quantity of fuel consumed by the heating value of the fuel.
- **Net useful power output (W_E).** Net useful power output is the gross power produced by the electric generator minus any parasitic electric losses—in other words, the electrical power used to support the CHP system. (An example of a parasitic electric loss is the electricity that may be used to compress the natural gas before the gas can be fired in a turbine.)
- **Net useful thermal output (ΣQ_{TH}).** Net useful thermal output is equal to the gross useful thermal output of the CHP system minus the thermal input. An example of thermal input is the energy of the condensate return and makeup water fed to a heat recovery steam generator (HRSG). Net useful thermal output represents the otherwise wasted thermal energy that was recovered by the CHP system.

Calculating Total System Efficiency

The most commonly used approach to determining a CHP system's efficiency is to calculate total system efficiency. Also known as thermal efficiency, the total system efficiency (η_O) of a CHP system is the sum of the net useful power output (W_E) and net useful thermal outputs (ΣQ_{TH}) divided by the total fuel input (Q_{FUEL}), as shown below:

$$\eta_O = \frac{W_E + \Sigma Q_{TH}}{Q_{FUEL}}$$

The calculation of total system efficiency is a simple and useful method that evaluates what is produced (i.e., power and thermal output) compared with what is consumed (i.e., fuel). CHP systems with a relatively high net useful thermal output typically correspond to total system efficiencies in the range of 60% to 85%.

Note that this metric *does not differentiate between the value of the power output and the thermal output*; instead, it treats power output and thermal output as additive

[80] U.S. EPA, Catalog of CHP Technologies – Appendix A: Expressing CHP Efficiency, March 2015.

properties with the same relative value. In reality and in practice, thermal output and power output are not interchangeable because they cannot be converted easily from one to another. However, typical CHP applications have coincident power and thermal demands that must be met. It is reasonable, therefore, to consider the values of power and thermal output from a CHP system to be equal in many situations.

Calculating Effective Electric Efficiency

Effective electric efficiency calculations allow for a direct comparison of CHP to conventional power generation system performance (e.g., electricity produced from central stations, which is how most electricity is produced in the United States).

Effective electric efficiency (ε_{EE}) can be calculated using the equation below, where (W_E) is the net useful power output, (ΣQ_{TH}) is the sum of the net useful thermal outputs, (Q_{FUEL}) is the total fuel input, and α equals the efficiency of the conventional technology that otherwise would be used to produce the useful thermal energy output if the CHP system did not exist:

$$\varepsilon_{EE} = \frac{W_E}{Q_{FUEL} - \Sigma\,(Q_{TH} / \alpha)}$$

For example, if a CHP system is natural gas fired and produces steam, then α represents the efficiency of a conventional natural gas-fired boiler. Typical α values for boilers are: 0.8 for natural gas-fired boiler (used in this report), 0.75 for a biomass-fired boiler, and 0.83 for a coal-fired boiler.

The calculation of effective electric efficiency is essentially the CHP net electric output divided by the additional fuel the CHP system consumes over and above what would have been used by conventional systems to produce the thermal output for the site. In other words, this metric measures how effectively the CHP system generates power once the thermal demand of a site has been met.

Typical effective electrical efficiencies for combustion turbine-based CHP systems are in the range of 51% to 69%. Typical effective electrical efficiencies for reciprocating engine-based CHP systems are in the range of 69% to 84%.

Many CHP systems are designed to meet a host site's unique power and thermal demand characteristics. As a result, a truly accurate measure of a CHP system's efficiency may require additional information and broader examination beyond what is described in this report.

Reciprocating Engine Calculation Basis

Electric Heat Rate, HHV (Btu/kWh) = 3412 / efficiency of conversion of fuel energy input to net electrical generation output. There are 3,412 Btu per kWh, which is the conversion factor used.

Thermal Output (MMBtu/hr) = useful thermal output generated by the engine recovered as heat energy from engine jacket water and exhaust gas generating hot water at 120 °C.

Total CHP Efficiency (%) = (Thermal Output + Thermal equivalent of Electrical Output) / Fuel Input. Thermal equivalent of Electrical Output = Output Capacity (kW) * 3412 Btu/kWh.

Power to Thermal Output Ratio = Electric Efficiency / Thermal Efficiency. Thermal Efficiency = Total CHP Efficiency – Electric Efficiency.

Net Heat Rate = (total fuel energy input – fuel that would normally be used to generate the equivalent thermal output as the CHP system thermal output) / CHP electric output. In this analysis, displaced boilers are assumed to be 80% efficient.

Natural Gas Turbine Calculation Basis

Electric Heat Rate = Fuel Input/Electric Capacity

Fuel Input = Calculated based on heat rate and net power output

Thermal Output = useful thermal output generated by the engine recovered as heat energy from engine jacket water and exhaust gas generating hot water at 120 °C.

Total CHP Efficiency (%) = (Thermal Output + Thermal equivalent of Electrical Output) / Fuel Input. Thermal equivalent of Electrical Output = Output Capacity (kW) * 3412 Btu/kWh.

Power to Thermal Output Ratio = Electric Efficiency / Thermal Efficiency. Thermal Efficiency = Total CHP Efficiency – Electric Efficiency.

Net Heat Rate = (total fuel energy input – fuel that would normally be used to generate the equivalent thermal output as the CHP system thermal output) / CHP electric output. In this analysis, displaced boilers are assumed to be 80% efficient.

Appendix D
Summary of Industrial Technologies and Cost Data

Reference case

2015								
Technology	**Reciprocating Engine 1,200 kW**	**Reciprocating Engine 3,000 kW**	**Natural Gas Turbine 4,600 kW**	**Natural Gas Turbine 10,360 kW**	**Natural Gas Turbine 23,200 kW**	**Natural Gas Turbine 45,000 kW**	**Combined Cycle 117,000 kW**	**Combined Cycle 376,000 kW**
Electric Capacity (kW)	1,200	3,000	4,600	10,360	23,200	45,000	117,000	376,000
Electric Heat Rate, HHV (Btu/kWh)	8,727	8,667	9,827	10,872	10,338	8,987	6,829	6,364
Electric Efficiency, HHV (%)	39.10	39.37	34.72	31.38	33.01	37.97	49.96	53.61
Fuel Input (MMBtu/hr)	10.47	26.00	45.21	112.64	239.83	404.42	614.65	1546.56
Thermal Energy Output (MMBtu/hr)	4.08	9.88	14.01	41.68	91.14	137.50	245.86	695.95
Total CHP Efficiency (%)	78.10	77.37	65.93	68.38	71.01	71.97	64.95	82.95
Power to Thermal Output Ratio	1.00	1.04	1.12	0.85	0.87	1.12	1.62	1.84
Net Heat Rate (Btu/kWh)	4,477	4,550	6,019	5,844	5,427	5,168	5,253	4,113
Variable O&M Costs (2015 $/kWh)	0.0147	0.0131	0.0092	0.0070	0.0041	0.0033	0.0024	0.0016
Fixed O&M Costs (2015 $/kW-year)	19.29	17.41	16.80	16.29	14.84	14.65	13.87	13.03
Equipment ($kW-AC)	1,107	930	851	762	571	471	565	452
Installation Labor and Materials ($/kW)	493	355	255	335	213	207	335	350
Engineering/Construction Management/Contingency	650	496	399	300	193	169	435	278
Owners Costs	226	179	150	140	98	101	241	194
Total Installed Costs (2015 $/kW)	**2,476**	**1,960**	**1,655**	**1537**	**1,075**	**948**	**1,576**	**1,274**

Reference case

2018								
Technology	**Reciprocating Engine 1,200 kW**	**Reciprocating Engine 3,000 kW**	**Natural Gas Turbine 4,600 kW**	**Natural Gas Turbine 10,360 kW**	**Natural Gas Turbine 23,200 kW**	**Natural Gas Turbine 45,000 kW**	**Combined Cycle 117,000 kW**	**Combined Cycle 376,000 kW**
Electric Capacity (kW)	1,200	3,000	4,600	10,360	23,200	45,000	117,000	376,000
Electric Heat Rate, HHV (Btu/kWh)	8,713	8,654	9,768	10,807	10,276	8,933	6,789	6,270
Electric Efficiency, HHV (%)	39.16%	39.43%	34.94%	31.35%	32.97%	37.93%	49.91%	54.41%
Fuel Input (MMBtu/hr)	10.46	25.96	44.93	111.96	283.39	401.99	610.97	1,523.70
Thermal Energy Output (MMBtu/hr)	4.08	9.87	13.93	41.43	90.59	136.68	244.39	685.67
Total CHP Efficiency (%)	78.16	77.43	65.93	68.57	71.21	72.20	65.34	84.20
Power to Thermal Output Ratio	1.01	1.04	1.13	0.85	0.87	1.12	1.63	1.87
Net Heat Rate (Btu/kWh)	4,470	4,543	5,983	5,809	5,395	5,137	5,222	4,052
Variable O&M Costs (2015 $/kWh)	0.0147	0.0131	0.0091	0.0070	0.0041	0.0033	0.0024	0.0016
Fixed O&M Costs (2015 $/kW-year)	19.29	17.41	16.80	16.29	14.84	14.65	13.87	13.03
Equipment ($kW-AC)	1,104	928	846	761	570	470	564	445
Installation Labor and Materials ($/kW)	492	354	253	335	213	206	329	345
Engineering/Construction Management/Contingency	648	494	396	300	193	169	433	274
Owners Costs	225	178	149	140	98	101	239	191
Total Installed Costs (2018 $/kW)	**2,469**	**1,954**	**1,644**	**1,536**	**1,074**	**947**	**1,565**	**1,255**