Updated Capital Cost Estimates for Electricity Generation Plants

November 2010

U. S. Energy Information Administration
Office of Energy Analysis

U.S. Department of Energy
Washington, DC 20585

U.S. Energy Information Administration
Independent Statistics and Analysis

This report was prepared by the U.S. Energy Information Administration (EIA), the statistical and analytical agency within the U.S. Department of Energy. By law, EIA's data, analyses, and forecasts are independent of approval by any other officer or employee of the United States Government. The views in this report therefore should not be construed as representing those of the Department of Energy or other Federal agencies.

The current and future projected cost of new electricity generation capacity is a critical input into the development of energy projections and analyses. The cost of new generating plants plays an important role in determining the mix of capacity additions that will serve growing loads in the future. New plant costs also help to determine how new capacity competes against existing capacity, and the response of the electricity generators to the imposition of environmental controls on conventional pollutants or any limitations on greenhouse gas emissions.

The current and projected future costs of energy-related capital projects, including but not limited to new electric generating plants, have been subject to considerable change in recent years. EIA updates its cost and performance assumptions annually, as part of the development cycle for the *Annual Energy Outlook* (AEO). For the *AEO2011* cycle, EIA commissioned an external consultant to develop current cost estimates for utility-scale electric generating plants.[1] This paper briefly summarizes the design of the project and provides a summary of its main findings, including a comparison of the new estimates to those used in *AEO2010*. The final section discusses how EIA uses information on cost and other factors in modeling technology choice in the electric power sector.

Developing Updated Estimates: Key Design Considerations

In order to maximize its value to EIA and external energy analysts, the project focused on gathering current information regarding the "overnight"[2] cost for a wide range of generation technologies, while taking care to use a common boundary in the costing exercise across those technologies. The cost estimates for each technology were developed for a generic facility of a specific size and configuration, and assuming a location without unusual constraints or infrastructure needs.

Current information is particularly important during a period when actual and estimated costs have been evolving rapidly, since the use of up-to-date cost estimates for some technologies in conjunction with estimates that are two, three, or even five years old for others can significantly skew the results of modeling and analysis. Where possible, costs estimates were based on information regarding actual or planned projects available to the consultant. When this information was not available, project costs were estimated by using costing models that account for current labor and material rates that would be necessary to complete the construction of a generic facility.

The use of a common boundary for costing is also very important. From experience in reviewing many costing studies for individual technologies, EIA is well aware that differences in practices regarding the inclusion or exclusion of various components of costs can have a large impact on overall cost estimates. This includes the categories of civil and structural costs (e.g., allowance

[1] EIA's electricity modeling includes both combined heat and power (CHP) technologies as well as a variety of distributed generation technologies, but those technologies were not addressed in the study, which focused on technologies within the electric power sector.

[2] "Overnight cost" is an estimate of the cost at which a plant could be constructed assuming that the entire process from planning through completion could be accomplished in a single day. This concept is useful to avoid any impact of financing issues and assumptions on estimated costs. Starting from overnight cost estimates, EIA's electricity modeling explicitly takes account of the time required to bring each generation technology online and the costs of financing construction in the period before a plant becomes operational.

for site preparation, drainage, underground utilities, and buildings), project indirect costs (e.g., a construction contingency), and owners costs (e.g., development costs, preliminary feasibility and engineering studies, environmental studies and permitting, legal fees, insurance costs, property taxes during construction, and the electrical interconnection costs, including a plant switchyard and tie-in to nearby transmission).

Summary of updated overnight capital costs estimates and comparison to information used in *AEO2010*

Table 1 summarizes the updated cost estimates for the generic utility-scale generation plants represented in EIA's model, including 7 powered by coal, 6 by natural gas, 3 by solar energy, 2 each by wind, hydro, biomass, and geothermal power, and 1 each by uranium and municipal solid waste. For some plant types there are several options shown to better represent the range of plants that might be built and their costs. For example, both single unit and dual unit advanced pulverized coal plants are shown, because many plants include multiple units and the costs associated with the dual unit configuration might better reflect the costs of most plants built. Similarly, solar photovoltaic technologies include a relatively small 7 MW system and a much larger 150 MW system, because there is such variance in the sizes of the facilities being considered. The nominal capacity of the generic plants ranges from a 7 megawatt (MW) solar plant to a 2,236 MW advanced dual-unit nuclear plant, reflecting the significant variation in the scale of utility applications. Each technology is characterized by its overnight capital costs, heat rate (where applicable), non-fuel operations and maintenance costs, and, though not shown in Table 1, its environmental characteristics.

Table 2 compares the updated overnight cost estimates to those used as inputs to the *AEO2010*. To facilitate comparisons, both are shown in real year 2010 dollars. Notable changes between the updated estimates and the *AEO2010* values include:

- **Coal & Nuclear:** The updated overnight capital cost estimates for coal and nuclear power plants are 25 to 37 percent above those in *AEO2010*. The higher cost estimates reflect many factors including the overall trend of rising costs of capital intensive technology in the power sector, higher global commodity prices, and the fact that there are relatively few construction firms with the ability to complete complex engineering projects such as a new nuclear or advanced coal power plant. The study assumes cost-sharing agreements between the project owner and the project construction contractors are reflective of those recently observed in the marketplace. As shown in Table 1, dual unit coal and nuclear plants generally have lower overnight costs per kilowatt than single-unit plants, reflecting their ability to take advantage of redundancies and scale economies in onsite infrastructure such as wastewater management and environmental controls to reduce the estimated total per-kilowatt cost of the project.
- **Natural Gas:** The updated cost estimates for natural gas combined cycle and combustion turbines generally remained similar to those of *AEO2010*.
- **Solar**: The overnight capital costs for solar thermal and photovoltaic technologies dropped by 25 percent and 10 percent, respectively. The decrease in the cost of photovoltaics was due to the assumption of larger plant capacity and falling component costs.

- **Onshore Wind**: Overnight costs for onshore wind increased by about 21 percent relative to *AEO 2010* assumptions. This is based on a specification for a new, stand-alone wind plant including all owners' costs and may differ from other reported costs in the literature, which are not fully characterized and may include sites that are built along side existing plants (and are thus able to avoid some amount of infrastructure costs).
- **Offshore Wind**: While offshore wind plants have been built in Europe, there have only been proposals in the United States, with final permitting only recently issued on the first of these proposals. The updated costs, some 50 percent higher than *AEO 2010* estimates, are consistent with substantial first-of-a-kind costs that would likely be encountered when building projects in the United States, which largely lacks the unique infrastructure, needed to support this type of construction.
- **Geothermal**: Geothermal costs are highly site-specific, and are represented as such in the AEO estimates. The updated cost estimate is over 50 percent higher than the same site in AEO 2010.
- **Biomass:** Biomass capital costs are largely unchanged from *AEO2010*. However, the technology represented by the costs has changed significantly. Prior estimates were for a highly efficient plant employing gasification and a combined cycle generator; the new estimate is for a significantly less efficient direct combustion boiler. The lower operating efficiency (and therefore higher operating cost) for the biomass plant considered in the updated cost estimate implies a reduced attractiveness of investment in new biomass generation at an overnight cost similar to that for the more efficient biomass plant characterized in *AEO2010.*

While estimates of the current cost of generic electric generation capacity of various types are one key input to EIA's analysis of electricity markets, the evolution of the electricity mix in each of the 22 regions to be modeled in *AEO2011*[3] is also sensitive to many other factors, including the projected evolution of capital costs over the modeling horizon, projected fuel costs, whether wholesale power markets are regulated or competitive, the existing generation mix, additional costs associated with environmental control requirements, load growth, and the load shape. Almost all of these factors can vary by region, as do capacity factors for renewable generation, operations and maintenance costs associated with individual plants, and cost multipliers applied to the generic estimates of overnight capital costs outlined in Tables 1 and 2. The next section provides a brief overview of some of the relevant issues, which are described in more detail in the description of the Electric Market Module included in the 2010 edition of the documentation for EIA's National Energy Modeling System.

EIA's Analysis of Technology Choice in the Electric Power Sector

Estimates of the overnight capital cost of generic generating technologies are only the starting point for consideration of the cost of new generating capacity in EIA modeling analyses. EIA also considers regional variation in construction costs, the structure of wholesale power markets that affect financing costs, the length of time required to bring each type of plant into service, and the capacity availability factors for solar and wind generation plants. EIA also accounts for

[3] In *AEO2010* and prior editions, the continental U.S., excluding Alaska, was divided in 13 regions for purposes of electricity modeling. The 22 region model that will be used starting with *AEO2011* will allow for better representation of policy boundaries and market structure at the State level.

three distinct dynamic forces that drive changes in plant cost over time. One is the projected relationship between rate of inflation for key drivers of plant costs, such as materials and construction costs, and the overall economy-wide rate of inflation. A projected economy–wide inflation rate that exceeds projected inflation for key plant cost drivers results in a projected decline in real (inflation-adjusted) capital costs. Projected capital costs also reflect projected technology progress over time. Learning-by-doing, which allows for additional reductions in projected capital costs as a function of cumulative additions new technologies, has a further effect on technology costs. See the *AEO2010* assumptions and model documentation for more details.[4]

Levelized cost is often cited as a convenient summary measure of the overall competiveness of different generating technologies. Levelized cost represents the present value of the total cost of building and operating a generating plant over an assumed economic life, converted to equal annual payments and expressed in terms of real dollars to remove the impact of inflation. Levelized costs, which reflect overnight capital cost, fuel cost, fixed and variable O&M cost, are a useful indicator of the competitiveness of different generation technologies. For technologies such as solar and wind generation that have no fuel costs and relatively small O&M costs, levelized cost changes in rough proportion to the estimated overnight capital cost of generation capacity. For technologies with significant fuel cost, both fuel cost and overnight cost estimates significantly affect levelized cost. Thus, while Table 2 shows little change between the updated capital cost estimates for natural gas combined cycle plants and those used in *AEO2010*, improved supply prospects for natural gas that will be incorporated in *AEO2011* result in lower projected prices that in turn lower the levelized cost of gas-fired generation and improve the attractiveness of operating and adding gas-fired generation technologies.

It is important to note, however, that actual investment decisions are affected by numerous factors other than levelized costs. The ***projected utilization rate***, which depends on the load shape and the existing resource mix in an area where additional capacity is needed, is one such factor. The ***existing resource mix*** in a region can directly affect the economic viability of a new investment through its effect on the economics surrounding the displacement of existing resources. For example, a wind resource that would primarily back out existing natural gas generation will generally have a higher value than one that would back out existing coal generation under fuel price conditions where the variable cost of operating existing gas-fired plants exceeds that of operating existing coal-fired plants.

A related factor is the ***capacity value***, which depends on both the existing capacity mix and load characteristics in a region. Since load must be balanced on a continuous basis, units whose output can be varied to follow demand generally have more value to a system than less flexible units or those whose operation is tied to the availability of an intermittent resource. Policy-related factors, such as investment or production tax credits for specified generation sources, can also impact investment decisions. Finally, although levelized cost calculations are generally made using an assumed set of capital and operating costs, the inherent uncertainty about future fuel prices and future policies, may cause plant owners or investors who finance plants to place a

[4] Assumptions and model documentation for the 2010 Annual Energy Outlook are available at http://www.eia.doe.gov/oiaf/aeo/index.html.

value on ***portfolio diversification***. EIA considers all of these factors in its analyses of technology choice in the electricity sector.

In sum, while overnight cost estimates are important inputs for EIA modelers and other analysts, they are not the sole driver of the choice among electric generation technologies. Users interested in additional details regarding these updated cost estimates should review the consultant study prepared by R.W. Beck for EIA in Appendix A.

Table 1. Updated Estimates of Power Plant Capital and Operating Costs

	Plant Characteristics		Plant Costs		
	Nominal Capacity (kilowatts)	Heat Rate (Btu/kWh)	Overnight Capital Cost (2010 $/kW)	Fixed O&M Cost (2010$/kW)	Variable O&M Cost (2010 $/MWh)
Coal					
Single Unit Advanced PC	650,000	8,800	$3,167	$35.97	$4.25
Dual Unit Advanced PC	1,300,000	8,800	$2,844	$29.67	$4.25
Single Unit Advanced PC with CCS	650,000	12,000	$5,099	$76.62	$9.05
Dual Unit Advanced PC with CCS	1,300,000	12,000	$4,579	$63.21	$9.05
Single Unit IGCC	600,000	8,700	$3,565	$59.23	$6.87
Dual Unit IGCC	1,200,000	8,700	$3,221	$48.90	$6.87
Single Unit IGCC with CCS	520,000	10,700	$5,348	$69.30	$8.04
Natural Gas					
Conventional NGCC	540,000	7,050	$978	$14.39	$3.43
Advanced NGCC	400,000	6,430	$1,003	$14.62	$3.11
Advanced NGCC with CCS	340,000	7,525	$2,060	$30.25	$6.45
Conventional CT	85,000	10,850	$974	$6.98	$14.70
Advanced CT	210,000	9,750	$665	$6.70	$9.87
Fuel Cells	10,000	9,500	$6,835	$350	$0.00
Uranium					
Dual Unit Nuclear	2,236,000	N/A	$5,335	$88.75	$2.04
Biomass					
Biomass CC	20,000	12,350	$7,894	$338.79	$16.64
Biomass BFB	50,000	13,500	$3,860	$100.50	$5.00
Wind					
Onshore Wind	100,000	N/A	$2,438	$28.07	$0.00
Offshore Wind	400,000	N/A	$5,975	$53.33	$0.00
Solar					
Solar Thermal	100,000	N/A	$4,692	$64.00	$0.00
Small Photovoltaic	7,000	N/A	$6,050	$26.04	$0.00
Large Photovoltaic	150,000	N/A	$4,755	$16.7	$0.00
Geothermal					
Geothermal – Dual Flash	50,000	N/A	$5,578	$84.27	$9.64
Geothermal – Binary	50,000	NA	$4,141	$84.27	$9.64
MSW					
MSW	50,000	18,000	$8,232	$373.76	$8.33
Hydro					
Hydro-electric	500,000	N/A	$3,076	$13.44	$0.00
Pumped Storage	250,000	N/A	$5,595	$13.03	$0.00

Table 2. Comparison of Updated Plant Costs to *AEO2010* Plant Costs

Table II					
	Overnight Capital Cost ($/kW)			Nominal Capacity KWs[1]	
	AEO 2011	AEO 2010	% Change	AEO 2011	AEO 2010
Coal					
Advanced PC w/o CCS	$2,844	$2,271	25%	1,300,000	600,000
IGCC w/o CCS	$3,221	$2,624	23%	1,200,000	550,000
IGCC CCS	$5,348	$3,857	39%	600,000	380,000
Natural Gas					
Conventional NGCC	$978	$1,005	-3%	540,000	250,000
Advanced NGCC	$1,003	$989	1%	400,000	400,000
Advanced NGCC with CCS	$2,060	$1,973	4%	340,000	400,000
Conventional CT	$974	$700	39%	85,000	160,000
Advanced CT	$665	$662	0%	210,000	230,000
Fuel Cells	$6,835	$5,595	22%	10,000	10,000
Nuclear					
Nuclear	$5,339	$3,902	37%	2,236,000	1,350,000
Renewables					
Biomass	$3,860	$3,931	-2%	50,000	80,000
Geothermal	$4,141	$1,786	132%	50,000	50,000
MSW - Landfill Gas	$8,232	$2,655	210%	50,000	30,000
Conventional Hydropower	$3,078	$2,340	53%	500,000	500,000
Wind	$2,438	$2,007	21%	100,000	50,000
Wind Offshore	$5,975	$4,021	49%	400,000	100,000
Solar Thermal	$4,692	$5,242	-10%	100,000	100,000
Photovoltaic	$4,755	$6,303	-25%	150,000	5,000

[1] Higher plant capacity reflects the assumption that plants would install multiple units per site and that savings could be gained by eliminating redundancies and combining services.

Appendix A

EOP III TASK 1606, SUBTASK 3 – REVIEW OF POWER PLANT COST AND PERFORMANCE ASSUMPTIONS FOR NEMS

Technology Documentation Report

R. W. Beck, Inc.

Science Applications International Corporation (SAIC)

Prepared by:

Vincent Hahn, R. W. Beck

John Fix, R. W. Beck

John Schmalz, R. W. Beck

Michael Wennen, R. W. Beck

Evis Couppis, Ph.D., R. W. Beck

Prepared in Coordination with:

Jay Ratafia-Brown, SAIC

Prepared For:

Energy Information Administration

Office of Integrated Analysis and Forecasting

Alan Beamon

Michael Leff

October 2010

Disclaimer

Certain statements included in this report constitute forward-looking statements. The achievement of certain results or other expectations contained in such forward-looking statements involve known and unknown risks, uncertainties and other factors which may cause actual results, performance or achievements described in the report to be materially different from any future results, performance or achievements expressed or implied by such forward-looking statements. We do not plan to issue any updates or revisions to the forward-looking statements if or when our expectations or events, conditions, or circumstances on which such statements are based occur.

TABLE OF CONTENTS

1. Introduction 1-1
1.1 Technologies Assessed 1-1
2. General Basis for Technology Evaluation Basis 2-1
2.1 R. W. Beck Background 2-1
2.2 Base Fuel Characteristics 2-1
2.3 Environmental Compliance Basis 2-4
2.4 Local Capacity Adjustments 2-4
2.5 Technology Specifications 2-6
2.6 Cost Estimation Methodology 2-6
2.6.1 Capital Cost 2-6
2.6.1.1 Costing Scope 2-6
2.6.2 Operation and Maintenance (O&M) Expenses 2-7
2.6.2.1 Fixed O&M (FOM) 2-8
2.6.2.2 Variable O&M (VOM) 2-8
2.6.2.3 Major Maintenance 2-8
3. Advanced Pulverized Coal (APC) 3-1
3.1 Mechanical Equipment and Systems 3-1
3.2 Electrical and Control Systems 3-2
3.3 Off-Site Requirements 3-2
3.4 Capital Cost Estimate 3-3
3.5 O&M Estimate 3-8
3.6 Environmental Compliance Information 3-8
4. Advanced Pulverized Coal With CCS (APC/CCS) 4-1
4.1 Mechanical Equipment and Systems 4-1
4.2 Electrical and Control Systems 4-2
4.3 Off-Site Requirements 4-2
4.4 Capital Cost Estimate 4-2
4.5 O&M Estimate 4-7
4.6 Environmental Compliance Information 4-8

5. Conventional Natural Gas Combined Cycle (NGCC) 5-1
5.1 Mechanical Equipment and Systems 5-1
5.2 Electrical and Control Systems 5-2
5.3 Off-Site Requirements 5-2
5.4 Capital Cost Estimate 5-3
5.5 O&M Estimate 5-6
5.6 Environmental Compliance Information 5-7

6. Advanced Generation Natural Gas Combined Cycle (AG-NGCC) 6-1
6.1 Mechanical Equipment and Systems 6-1
6.2 Electrical and Control Systems 6-1
6.3 Off-Site Requirements 6-1
6.4 Capital Cost Estimate 6-1
6.5 O&M Estimate 6-4
6.6 Environmental Compliance Information 6-4

7. Advanced Generation Natural Gas Combined Cycle With CCS (AG-NGCC/CCS) 7-1
7.1 Mechanical Equipment and Systems 7-1
7.2 Electrical and Control Systems 7-1
7.3 Off-Site Requirements 7-1
7.4 Capital Cost Estimate 7-1
7.5 O&M Estimate 7-4
7.6 Environmental Compliance Information 7-4

8. Conventional Combustion Turbine (CT) 8-1
8.1 Mechanical Equipment and Systems 8-1
8.2 Electrical and Control Systems 8-1
8.3 Off-Site Requirements 8-1
8.4 Capital Cost Estimate 8-2
8.5 O&M Estimate 8-5
8.6 Environmental Compliance Information 8-6

9. Advanced Combustion Turbine (ACT) 9-1
9.1 Mechanical Equipment and Systems 9-1
9.2 Electrical and Control Systems 9-1

9.3 Off-Site Requirements 9-1
9.4 Capital Cost Estimate 9-1
9.5 O&M Estimate 9-4
9.6 Environmental Compliance Information 9-4

10. Integrated Gasification Combined Cycle (IGCC) 10-1
10.1 Mechanical Equipment and Systems 10-1
10.2 Electrical and Control Systems 10-3
10.3 Off-Site Requirements 10-3
10.4 Capital Cost Estimate 10-4
10.5 O&M Estimate 10-10
10.6 Environmental Compliance Information 10-11

11. Integrated Gasification Combined Cycle With CCS (IGCC/CCS) 11-1
11.1 Mechanical Equipment and Systems 11-1
11.2 Electrical and Control Systems 11-1
11.3 Off-Site Requirements 11-1
11.4 Capital Cost Estimate 11-1
11.5 O&M Estimate 11-4
11.6 Environmental Compliance Information 11-4

12. Advanced Nuclear (AN) 12-1
12.1 Mechanical Equipment and Systems 12-1
12.2 Electrical and Control Systems 12-2
12.3 Off-Site Requirements 12-3
12.4 Capital Cost Estimate 12-3
12.5 O&M Estimate 12-7
12.6 Environmental Compliance Information 12-7

13. Biomass Combined Cycle (BCC) 13-1
13.1 Mechanical Equipment and Systems 13-1
13.2 Electrical and Control Systems 13-2
13.3 Off-Site Requirements 13-3

13.4 Capital Cost Estimate 13-3
13.5 O&M Estimate 13-7
13.6 Environmental Compliance Information 13-8

14. Biomass Bubbling Fluized Bed (BBFB) 14-1
14.1 Mechanical Equipment and Systems 14-1
14.2 Electrical and Control Systems 14-2
14.3 Off-Site Requirements 14-2
14.4 Capital Cost Estimate 14-2
14.5 O&M Estimate 14-6
14.6 Environmental Compliance Information 14-7

15. Fuel Cell (FC) Mechanical Equipment and Systems 15-1
15.1 Electrical and Control Systems 15-1
15.2 Off-Site Requirements 15-1
15.3 Capital Cost Estimate 15-2
15.4 O&M Estimate 15-5
15.5 Environmental Compliance Information 15-6

16. Geothermal Dual Flash (GT) 16-1
16.1 Mechanical Equipment and Systems 16-1
16.2 Electrical and Control Systems 16-2
16.3 Off-Site Requirements 16-2
16.4 Capital Cost Estimate 16-3
16.5 O&M Estimate 16-6
16.6 Environmental Compliance Information 16-6

17. Geothermal Binary (Binary) 17-1
17.1 Mechanical Equipment and Systems 17-1
17.2 Electrical and Control Systems 17-1
17.3 Off-Site Requirements 17-2
17.4 Capital Cost Estimate 17-2
17.5 O&M Estimate 17-5
17.6 Environmental Compliance Information 17-6

18. Municipal Solid Waste (MSW) 18-1
18.1 Mechanical Equipment and Systems 18-1
18.2 Electrical and Control Systems 18-2
18.3 Off-Site Requirements 18-2
18.4 Capital Cost Estimate 18-2
18.5 O&M Estimate 18-5
18.6 Environmental Compliance Information 18-6

19. Hydroelectric (HY) 19-1
19.1 Mechanical Equipment and Systems 19-1
19.2 Electrical and Control Systems 19-1
19.3 Off-Site Requirements 19-1
19.4 Capital Cost Estimate 19-2
19.5 O&M Estimate 19-5
19.6 Environmental Compliance Information 19-5

20. Pumped Storage (PS) 20-1
20.1 Mechanical Equipment and Systems 20-1
20.2 Electrical and Control Systems 20-1
20.3 Off-Site Requirements 20-1
20.4 Capital Cost Estimate 20-2
20.5 O&M Estimate 20-5
20.6 Environmental Compliance Information 20-5

21. Onshore Wind (WN) 21-1
21.1 Mechanical Equipment and Systems 21-1
21.2 Electrical and Control Systems 21-2
21.3 Off-Site Requirements 21-2
21.4 Capital Cost Estimate 21-2
21.5 O&M Estimate 21-5
21.6 Environmental Compliance Information 21-6

22. Offshore Wind (WF) 22-1
22.1 Mechanical Equipment and Systems 22-1
22.2 Electrical and Control Systems 22-2

22.3 Off-Site Requirements 22-2
22.4 Capital Cost Estimate 22-3
22.5 O&M Estimate 22-6
22.6 Environmental Compliance Information 22-6

23. Solar Thermal - Central Station (SO) 23-1
23.1 Mechanical Equipment and Systems 23-1
23.2 Electrical and Control Systems 23-2
23.3 Off-Site Requirements 23-3
23.4 Capital Cost Estimate 23-3
23.5 O&M Estimate 23-7
23.6 Environmental Compliance Information 23-7

24. Photovoltaic (Central Station) Facility (PV) 24-1
24.1 Mechanical Equipment and Systems 24-1
24.2 Electrical and Control Systems 24-1
24.3 Off-Site Requirements 24-2
24.4 Capital Cost Estimate 24-2
24.5 O&M Estimate 24-9
24.6 Environmental Compliance Information 24-10

LIST OF FIGURES

Figure 3-1 – Advanced Pulverized coal Design Configuration 3-2
Figure 4-1 – APC Facility Diagram 4-1
Figure 4-2 – APC/CCS Facility Diagram 4-2
Figure 5-1 – Conventional NGCC Design Configuration 5-2
Figure 6-1 – AG-NGCC Design Configuration 6-1
Figure 7-1 – AG-NGCC With CCS Design Configuration 7-1
Figure 8-1 – Conventional CT Design Configuration 8-1
Figure 9-1 – Advanced CT Design Configuration 9-1
Figure 10-1 – IGCC Design Configuration 10-3
Figure 11-1 – IGCC/CCS Design Configuration 11-1
Figure 12-1 – AN Design Configuration 12-2
Figure 13-1 – BCC Design Configuration 13-2
Figure 14-1 – BCC Design Configuration 14-1
Figure 15-1 – FC Design Configuration 15-1
Figure 16-1 – GT Design Configuration 16-2
Figure 17-1 – GT Design Configuration 17-1
Figure 19-1 – Hy Design Configuration 19-1
Figure 20-1 – PS Design Configuration 20-1
Figure 21-1 – WN Design Configuration 21-1
Figure 22-1 – WF Design Configuration 22-2
Figure 23-1 – So Design Configuration 23-2
Figure 24-1 – PV Design Configuration 24-1

LIST OF TABLES

Table 1-1 – List of Technologies For Review 1-2
Table 2-1 – Reference Coal Specification 2-2
Table 2-2 – Natural Gas Specification 2-3
Table 2-3 – Wood-Biomass Specification 2-3
Table 2-4 – CT Capacity Adjustments 2-5
Table 2-5 – Technology Performance Specifications 2-10
Table 3-1 – Base Plant Site Capital Cost Estimate for APC 3-3
Table 3-2 – Base Plant Site Capital Cost Estimate for APC 3-4
Table 3-3 – Location-Based Costs for APC (650,000 kW) 3-5
Table 3-4 – Location-Based Costs for APC (1,300,000 kW) 3-7
Table 3-5 – O&M Expenses for APC (650,000 kW) 3-8
Table 3-6 – O&M Expenses for APC (1,300,000 kW) 3-8
Table 3-7 – Environmental Emissions for APC 3-9
Table 4-1 – Base Plant Site Capital Cost Estimate for APC/CCS 4-3
Table 4-2 – Base Plant Site Capital Cost Estimate for APC/CCS 4-3
Table 4-3– Location-Based Costs for APC/CCS Facility (650,000 kW) 4-4
Table 4-4 – Location-Based Costs for APC/CCS Facility (1,300,000 kW) 4-6
Table 4-5 – O&M Expenses for APC/CCS (650,000 kW) 4-7
Table 4-6 – O&M Expenses for APC/CCS (1,300,000 kW) 4-8
Table 4-7 – Environmental Emissions for APC/CCS 4-8
Table 5-1 – Base Plant Site Capital Cost Estimate for Conventional NGCC 5-3
Table 5-2 – Location-Based Costs for Conventional NGCC 5-5
Table 5-3 – O&M Expenses for Conventional NGCC 5-7
Table 5-4 – Environmental Emissions for Conventional NGCC 5-7
Table 6-1 – Base Plant Site Capital Cost Estimate for AG-NGCC 6-2
Table 6-2 – Location-Based Costs for AG-NGCC 6-3
Table 6-3 – O&M Expenses for AG-NGCC 6-4
Table 6-4 – Environmental Emissions for AG-NGCC 6-5
Table 7-1 – Base Plant Site Capital Cost Estimate for AG-NGCC/CCS Cost 7-2
Table 7-2 – Location-Based Costs for AG-NGCC/CCS 7-3

Table 7-3 – O&M Expenses for AG-NGCC With CCS 7-4
Table 7-4 – Environmental Emissions for AG-NGCC/CCS 7-5
Table 8-1 – Base Plant Site Capital Cost Estimate for Conventional CT 8-2
Table 8-2 – Location-Based Costs for Conventional CT 8-4
Table 8-3 – O&M Expenses for Conventional CT 8-6
Table 8-4 – Environmental Emissions for Conventional CT 8-6
Table 9-1 – Base Plant Site Capital Cost Estimate for Advanced CT 9-2
Table 9-2 – Location-Based Costs for Advanced CT 9-3
Table 9-3 – O&M Expenses for Advanced CT 9-4
Table 9-4 – Environmental Emissions for Advanced CT 9-5
Table 10-1 – Base Plant Site Capital Cost Estimate for IGCC 10-4
Table 10-2 – Base Plant Site Capital Cost Estimate for IGCC 10-5
Table 10-3 – Location-Based Costs for IGCC (600,000 kW) 10-7
Table 10-4 – Location-Based Costs for IGCC (1,200,000 kW) 10-9
Table 10-5 – O&M Expenses for IGCC (600,000 kW) 10-10
Table 10-6 – O&M Expenses for IGCC (1,200,000 kW) 10-11
Table 10-7 – Environmental Emissions for IGCC 10-11
Table 11-1 – Base Plant Site Capital Cost Estimate for IGCC/CCS 11-2
Table 11-2 – Location-Based Costs for IGCC/CCS 11-3
Table 11-3 – O&M Expenses for IGCC/CCS 11-4
Table 11-4 – Environmental Emissions for IGCC/CCS 11-5
Table 12-1 – Base Plant Site Capital Cost Estimate for AN 12-4
Table 12-2 – Location-Based Costs for AN 12-5
Table 12-3 – O&M Expenses for AN 12-7
Table 12-4 – Environmental Emissions for AN 12-7
Table 13-1 – Base Plant Site Capital Cost Estimate for BCC 13-4
Table 13-2 – Location-Based Costs for BCC 13-6
Table 13-3 – O&M Expenses for BCC 13-7
Table 13-4 – Environmental Emissions for BCC 13-8
Table 14-1 – Base Plant Site Capital Cost Estimate for BBFB 14-3
Table 14-2– Location-Based Costs for BBFB 14-5
Table 14-3 – O&M Expenses for BCC 14-6
Table 14-4 – Environmental Emissions for BBFB 14-7

Table 15-1 – Base Plant Site Capital Cost Estimate for FC 15-2
Table 15-2 – Location-Based Costs for FC 15-4
Table 15-3 – O&M Expenses for FC 15-5
Table 15-4 – Environmental Emissions for FC 15-6
Table 16-1 – Base Plant Site Capital Cost Estimate for GT 16-3
Table 16-2 – Location-Based Costs for GT 16-5
Table 16-3 – O&M Expenses for GT 16-6
Table 16-4 – Environmental Emissions for GT 16-7
Table 17-1 – Base Plant Site Capital Cost Estimate for GT 17-2
Table 17-2 – Location-Based Costs for GT 17-4
Table 17-3 – O&M Expenses for Binary 17-5
Table 17-4 – Environmental Emissions for Binary 17-6
Table 18-1 – Base Plant Site Capital Cost Estimate for MSW 18-3
Table 18-2 – Location-Based Costs for MSW 18-4
Table 18-3 – O&M Expenses for MSW 18-6
Table 18-4 – Environmental Emissions for MSW 18-6
Table 19-1 – Base Plant Site Capital Cost Estimate for HY 19-2
Table 19-2 – Location-Based Costs for HY 19-4
Table 19-3 – O&M Expenses for HY 19-5
Table 19-4 – Environmental Emissions for HY 19-6
Table 20-1 – Base Plant Site Capital Cost Estimate for PS 20-2
Table 20-2 – Location-Based Costs for PS 20-4
Table 20-3 – O&M Expenses for PS 20-5
Table 20-4 – Environmental Emissions for PS 20-6
Table 21-1 – Location-Based Costs for WN 21-3
Table 21-2 – Location-Based Costs for WN 21-4
Table 21-3 – O&M Expenses for WN 21-6
Table 21-4 – Environmental Emissions for WN 21-6
Table 22-1 – Base Plant Site Capital Cost Estimate for WF 22-3
Table 22-2 – Location-Based Costs for WF 22-5
Table 23-1 – Base Plant Site Capital Cost Estimate for SO 23-4
Table 23-2 – Location-Based Costs for SO 23-6
Table 23-3 – O&M Expenses for SO 23-7

Table 23-4 – Environmental Emissions for SO 23-8
Table 24-1 – Base Plant Site Capital Cost Estimate for PV 24-3
Table 24-2 – Base Plant Site Capital Cost Estimate for PV 24-4
Table 24-3 – Location-Based Costs for PV (7 MW) 24-6
Table 24-4 – Location-Based Costs for PV (150 MW) 24-8
Table 24-5 – O&M Expenses for PV Facility (7 MW) 24-9
Table 24-6 – O&M Expenses for PV Facility (150 MW) 24-9
Table 24-7 – Environmental Emissions for PV 24-10

LIST OF ACRONYMS AND ABBREVIATIONS

AC	Alternating Current
AG	Advanced Generation
AG	Advanced Generation
AG-NGCC	Advanced Generation Natural Gas Combined Cycle
AG-NGCC/CCS	Advanced Generation Natural Gas Combined Cycle with CCS
AGR	Acid Gas Removal
AN	Advanced Nuclear
APC	Advanced Pulverized Coal Facility
APC/CCS	Advanced Pulverized Coal with CCS
ASU	Air Separation Unit
BACT	Best Available Control Technology
BCC	Biomass Combined Cycle
BBFB	Biomass Bubbling Fluidized Bed
BFB	Bubbling Fluidized Bed
BOP	Balance-of-Plant
BPF	Brine Processing Facility
Btu	British Thermal Unit
C	Carbon
CCS	Carbon Capture and Sequestration
CFB	Circulating Fluidized Bed
C_2H_6	Ethane
C_3H_8	Propane
C_4H_{10}	*n*-Butane
CH_4	Methane
CO	Carbon Monoxide
CO_2	Carbon Dioxide
COS	Carbonyl Sulfide
CT	Combustion Turbine
DC	Direct Current
DCS	Distributed Control System
DLN	Dry Low-NO_X Combustion
EIA	Energy Information Administration
EMM	Electricity Market Module of NEMS
EPC	Engineering, Procurement and Construction
°F	Degrees Fahrenheit
FC	Fuel Cell
FGD	Flue Gas Desulfurization
FOM	Fixed O&M
Geothermal	GT
GHG	Greenhouse Gas
GSU	Generator Step-up Transformer
GT	Geothermal
H_2S	Hydrogen Sulfide

HHV	High(er) Heating Value
HP	High Pressure
HRSG	Heat Recovery Steam Generator
HY	Hydroelectric
Hz	Hertz
I&C	Instrumentation and Controls
IGCC	Integrated Gasification Combined Cycle
IGCC/CCS	Integrated Gasification Combined Cycle Carbon Capture and Sequestration
IP	Intermediate Pressure
kg	Kilograms
KJ	Kilojoules
kW	Kilowatt
kWh	Kilowatt-hour
kV	Kilovolt
kVA	kilovolt-amperes
lb	Pound
LHV	Low(er) Heating Value
CLP	Low Pressure
MEA	Monoethanolamine
MJ	Mega joules
MMBtu	Million Btu
MSW	Municipal Solid Waste
MW	Megawatt
MWe	Megawatts Electric
MWh	Megawatt-hour
MVA	Mega-volt-amperes
N_2	Nitrogen
NEMS	National Energy Modeling System
NGCC	Natural Gas Combined Cycle
NH_3	Ammonia
NO_X	Oxides of Nitrogen
O_2	Oxygen
O&M	Operating and Maintenance
NOx	Nitrogen Oxides
ppmvd	Parts per Million Volume Dry
PS	Pumped Storage
psia	Pounds per Square Inch Absolute
PV	Photovoltaic
PWR	Pressurized Water Reactor
RCS	Reactor Coolant System
S	Sulfur
SCADA	Supervisory Control and Data Acquisition
scf	Standard Cubic Feet
scm	Standard Cubic Meters
SCR	Selective Catalytic Reduction
SNCR	Selective Non-catalytic Reduction

SO	Solar Thermal
SO_2	Sulfur Dioxide
SRU	Sulfur Recovery Unit
ST	Steam Turbine
TGF	Turbine Generating Facility
U.S.	United States
V	Volt
VOM	Variable Operating and Maintenance
WF	Offshore Wind
WFGD	Wet Flue Gas Desulfurization
WN	Onshore Wind
WTG	Wind Turbine Generator
ZLD	Zero Liquid Discharge

1. INTRODUCTION

This report presents R. W. Beck, Inc.'s ("R. W. Beck") performance and cost assessment of power generation technologies utilized by the Energy Information Administration ("EIA") in the Electricity Market Module ("EMM") of the National Energy Modeling System ("NEMS"). The assessment for each of the technologies considered includes the following:

- Overnight construction costs, construction lead times, first year of commercial application, typical unit size, contingencies, fixed and variable operating costs, and efficiency (heat rate). The analysis was conducted to ensure that the overnight cost estimates developed for use in the EMM for electric generating technologies are consistent in scope, accounting for all costs in the planning and development of a power plant including the basic interconnection to the grid at the plant site, but excluding financing costs.
- For emission control technologies, the removal rates for pollutants and other assumptions were examined.
- Review of the regional multipliers that are used to represent local conditions, such as labor rates that are included in EMM.
- Review of assumptions regarding how construction costs decline over time due to technological advancement and "learning by doing."
- Review of the appropriateness of technology-specific project and process contingency assumptions (capturing differences between engineering estimates and realized costs for new technologies).
- Where possible, compare the values used by EIA with those for recently built facilities in the United States ("U.S.") or abroad. Where such actual cost estimates do not exist, an assessment was made between values used by EIA and other analyst estimates, as well as vendor estimates.
- The key factors expected to drive each technology's costs.
- Document the source and basis for final recommendations for altering or retaining the various assumptions.

1.1 TECHNOLOGIES ASSESSED

The following table lists all technologies to be assessed in this project.

TABLE 1-1 – LIST OF TECHNOLOGIES FOR REVIEW

TECHNOLOGY	DESCRIPTION	COMMENTS
Advanced Pulverized Coal	650 megawatt-electrical ("MWe") and 1,300 MWe; supercritical; all advanced pollution control technologies	Greenfield Installation
Advanced Pulverized Coal with Carbon Capture and Sequestration ("CCS")	650 MWe and 1,300 MWe; supercritical; all advanced pollution control technologies, including CCS technologies	Greenfield Installation
Conventional Natural Gas Combined Cycle ("NGCC")	540 MWe; F-Class system	
Advanced NGCC	400 MWe; H-Class system	
Advanced NGCC with CCS	340 MWe; H-Class system	
Conventional Combustion Turbine ("CT")	85 MWe; E-Class turbine	
Advanced CT	210 MWe; F-Class turbine	
Integrated Gasification Combined Cycle ("IGCC")	600 MWe and 1,200 MWe; F-Class-syngas system	
IGCC with CCS	520 MWe; F-Class-syngas system	
Advanced Nuclear	2,236 megawatt ("MW"); AP1000 PWR Basis	Brownfield Installation
Biomass Combined Cycle	20 MWe	Wood Fuel
Biomass Bubbling Fluidized Bed ("BFB")	50 MWe	Wood Fuel
Fuel Cells	10 MWe	
Geothermal	50 MWe Dual Flash and Binary	
Municipal Solid Waste ("MSW")	50 MWe	
Hydroelectric	500 MWe	
Pumped Storage	250 MWe	
Wind Farm – Onshore	100 MWe	
Wind Farm – Offshore	400 MWe	
Solar Thermal – Central Station	100 MWe	
Photovoltaic – Central Station	7 MWe –AC and 150 MWe - AC	

2. GENERAL BASIS FOR TECHNOLOGY EVALUATION BASIS

This section specifies the general evaluation basis used for all technologies reviewed herein.

2.1 R. W. BECK BACKGROUND

R. W. Beck is an infrastructure consulting firm that has been providing technical and business consulting in the energy industry since 1942. Particularly, R. W. Beck has supported the purchase, sale, financing and Owner's advisory consulting for tens-of-billions of dollars of power plants across the world in all commercial power generating technologies as well as many emerging technologies. This background has supported R. W. Beck's acumen with respect to construction costs, operating costs, technology development and evolution, as well as trends in environmental regulation and compliance.

2.2 BASE FUEL CHARACTERISTICS

This section provides a general fuel basis for each of the fuel types utilized by the technologies considered in this report and listed in Table 1-1. Each of the technologies that combust a fuel has the ability to operate over a range of fuels; thus Table 2-1, Table 2-2 and Table 2-3 show a typical fuel specification for coal, natural gas, and wood-biomass, respectively. MSW has such a wide range of constituents; a typical analysis is not included here.

TABLE 2-1 – REFERENCE COAL SPECIFICATION

Rank	Bituminous	
Seam	**Illinois No. 6 (Herrin)**	
Source	**Old Ben Mine**	
Proximate Analysis (weight %) (Note A)		
	As Received	**Dry**
Moisture	11.12	0.00
Ash	9.70	10.91
Volatile Matter	34.99	39.37
Fixed Carbon	44.19	49.72
Total	100.00	100.00
Sulfur	2.51	2.82
HHV (1), KJ/kg (2)	27,113	30,506
HHV, Btu/lb (3)	11,666	13,126
LHV (4), KJ/kg	26,151	29,544
LHV, Btu/lb	11,252	12,712
Ultimate Analysis (weight %)		
	As Received	**Dry**
Moisture	11.12	0.00
Carbon	63.75	71.72
Hydrogen	4.50	5.06
Nitrogen	1.25	1.41
Chlorine	0.29	0.33
Sulfur	2.51	2.82
Ash	9.70	10.91
Oxygen	6.88	7.75
Total	100.00	100.00

(1) High(er) heating value ("HHV").
(2) Kilojoules per kilogram ("KJ/kg").
(3) British thermal units per pound ("Btu/lb").
(4) Low(er) heating value ("LHV").

TABLE 2-2 – NATURAL GAS SPECIFICATION

Component		Volume Percentage	
Methane	CH_4	93.9	
Ethane	C_2H_6	3.2	
Propane	C_3H_8	0.7	
n-Butane	C_4H_{10}	0.4	
Carbon Dioxide	CO_2	1.0	
Nitrogen	N_2	0.8	
Total		100.0	
		LHV	**HHV**
kJ/kg MJ/scm (1)		47.764 35	52,970 39
Btu/lb Btu/scf (2)		20,552 939	22,792 1,040

(1) Mega joules per standard cubic meter ("MJ/scm").
(2) Standard cubic feet ("scf").

TABLE 2-3 – WOOD-BIOMASS SPECIFICATION (1)

Component		Volume Percentage	
Moisture		17.27	
Carbon	C	41.55	
Hydrogen	H_2	4.77	
Nitrogen	N_2	0.37	
Sulfur	S	<0.01	
Ash		2.35	
Oxygen (2)	O_2	33.75	
Total		100.0	
			HHV
Btu/lb			6,853

(1) As received.
(2) Oxygen by Difference.

2.3 ENVIRONMENTAL COMPLIANCE BASIS

The technology assessments considered the emissions rates after implementation of best available control technology ("BACT"), including sulfur dioxide ("SO_2"), oxides of nitrogen ("NO_X"), particulate matter, mercury, and carbon dioxide ("CO_2"). With respect to CCS technologies, which are not currently considered "proven" or BACT by regulating bodies, R. W. Beck assumed capture and sequestration technologies that are currently in development for large-scale deployment, as discussed herein, and at industry expected rates of CO_2 removal (i.e., 90 percent).

2.4 LOCAL CAPACITY ADJUSTMENTS

For power plants that use CT technologies, adjustments were made for regional ambient conditions. The adjustments took into consideration that CTs are machines that produce power proportional to mass flow. Since air density is inversely proportional to temperature, ambient temperature has a strong influence on the capacity of a given technology utilizing a CT (e.g., peaking power plant, combined-cycle power plant, and some gasification power plants). Additionally, relative humidity impacts the available capacity of a CT and consequently a CT-based power plant, primarily driven by the base assumption that the CT-based technologies incorporate inlet evaporative cooling. By circulating water across a porous media in the CT compressor inlet (across which the air flows), the inlet evaporative cooling reduces the difference between the ambient dry-bulb temperature (the temperature that is typically reported to the public as a measure of "local temperature") and the wet-bulb temperature (a measure of relative humidity). Since inlet evaporative cooling is limited by the wet-bulb temperature, the effectiveness of these devices increases in areas of high dry-bulb temperature and low relative humidity. The final adjustment for ambient conditions made for the CT-based plants is ambient pressure, which on average (notwithstanding high or low pressure weather fronts that pass through a region) takes into consideration elevation (average number of feet above sea level). Air density is proportional to ambient pressure.

Table 2-4 provides the aggregate capacity adjustment for each location, which provides regional differences related to capital costs against the ISO net capacity for the CT-based power plant technologies.

TABLE 2-4 – CT CAPACITY ADJUSTMENTS

		Conventional CT			Advanced CT			Conventional NGCC			Advanced - NGCC			Advanced - NGCC With CCS			IGCC			IGCC With CCS		
		ISO Capacity	Capacity Adjustment	Adjusted Capacity	ISO Capacity	Capacity Adjustment	Adjusted Capacity	ISO Capacity	Capacity Adjustment	Adjusted Capacity	ISO Capacity	Capacity Adjustment	Adjusted Capacity	ISO Capacity	Capacity Adjustment	Adjusted Capacity	ISO Capacity	Capacity Adjustment	Adjusted Capacity	ISO Capacity	Capacity Adjustment	Adjusted Capacity
State	City	(MW)	(MW)	(MW)	(MW)	(MW)	(MW)	(MW)	(MW)	(MW)	(MW)	(MW)	(MW)	(MW)	(MW)	(MW)	(MW)	(MW)	(MW)	(MW)	(MW)	(MW)
Alaska	Anchorage	85	7.58	92.58	210	18.73	229	540	32.27	572	400	35.67	436	340	30.32	370	600	35.85	636	520	46.38	566
Alaska	Fairbanks	85	9.97	94.97	210	24.63	235	540	42.43	582	400	46.91	447	340	39.87	380	600	47.14	647	520	60.98	581
Alabama	Huntsville	85	-2.12	82.88	210	-5.23	205	540	-9.01	531	400	-9.96	390	340	-8.46	332	600	-10.01	590	520	-12.94	507
Arizona	Phoenix	85	-8.33	76.67	210	-20.59	189	540	-35.47	505	400	-39.22	361	340	-33.34	307	600	-39.41	561	520	-50.98	469
Arkansas	Little Rock	85	-1.77	83.23	210	-4.37	206	540	-7.53	532	400	-8.32	392	340	-7.07	333	600	-8.36	592	520	-10.82	509
California	Los Angeles	85	-1.77	83.23	210	-4.37	206	540	-7.52	532	400	-8.32	392	340	-7.07	333	600	-8.36	592	520	-10.81	509
California	Redding	85	-2.52	82.48	210	-6.21	204	540	-10.71	529	400	-11.84	388	340	-10.06	330	600	-11.90	588	520	-15.39	505
California	Bakersfield	85	-3.77	81.23	210	-9.30	201	540	-16.03	524	400	-17.72	382	340	-15.06	325	600	-17.81	582	520	-23.03	497
California	Sacramento	85	-0.69	84.31	210	-1.71	208	540	-2.95	537	400	-3.26	397	340	-2.78	337	600	-3.28	597	520	-4.24	516
California	San Francisco	85	0.83	85.83	210	2.06	212	540	3.54	544	400	3.92	404	340	3.33	343	600	3.94	604	520	5.09	525
Colorado	Denver	85	-12.30	72.70	210	-30.40	180	540	-52.37	488	400	-57.90	342	340	-49.22	291	600	-58.19	542	520	-75.27	445
Connecticut	Hartford	85	2.97	87.97	210	7.33	217	540	12.63	553	400	13.96	414	340	11.87	352	600	14.03	614	520	18.15	538
Delaware	Dover	85	1.22	86.22	210	3.00	213	540	5.17	545	400	5.72	406	340	4.86	345	600	5.75	606	520	7.43	527
District of Columbia	Washington	85	2.01	87.01	210	4.96	215	540	8.55	549	400	9.46	409	340	8.04	348	600	9.50	610	520	12.29	532
Florida	Tallahassee	85	-3.00	82.00	210	-7.42	203	540	-12.79	527	400	-14.14	386	340	-12.01	328	600	-14.21	586	520	-18.38	502
Florida	Tampa	85	-4.78	80.22	210	-11.80	198	540	-20.34	520	400	-22.49	378	340	-19.11	321	600	-22.60	577	520	-29.23	491
Georgia	Atlanta	85	-3.66	81.34	210	-9.05	201	540	-15.59	524	400	-17.24	383	340	-14.65	325	600	-17.32	583	520	-22.41	498
Hawaii	Honolulu	85	-6.75	78.25	210	-16.66	193	540	-28.71	511	400	-31.74	368	340	-26.98	313	600	-31.90	568	520	-41.26	479
Idaho	Boise	85	-5.52	79.48	210	-13.64	196	540	-23.50	517	400	-25.98	374	340	-22.08	318	600	-26.11	574	520	-33.77	486
Illinois	Chicago	85	1.76	86.76	210	4.35	214	540	7.49	547	400	8.28	408	340	7.04	347	600	8.33	608	520	10.77	531
Indiana	Indianapolis	85	0.20	85.20	210	0.50	211	540	0.87	541	400	0.96	401	340	0.81	341	600	0.96	601	520	1.24	521
Iowa	Davenport	85	1.81	86.81	210	4.47	214	540	7.70	548	400	8.51	409	340	7.23	347	600	8.55	609	520	11.06	531
Iowa	Waterloo	85	2.02	87.02	210	4.98	215	540	8.58	549	400	9.48	409	340	8.06	348	600	9.53	610	520	12.33	532
Kansas	Wichita	85	-2.91	82.09	210	-7.19	203	540	-12.39	528	400	-13.70	386	340	-11.65	328	600	-13.77	586	520	-17.81	502
Kentucky	Louisville	85	-0.20	84.80	210	-0.50	210	540	-0.86	539	400	-0.95	399	340	-0.81	339	600	-0.96	599	520	-1.24	519
Louisiana	New Orleans	85	-3.26	81.74	210	-8.05	202	540	-13.87	526	400	-15.34	385	340	-13.03	327	600	-15.41	585	520	-19.94	500
Maine	Portland	85	4.72	89.72	210	11.66	222	540	20.08	560	400	22.20	422	340	18.87	359	600	22.31	622	520	28.86	549
Maryland	Baltimore	85	1.21	86.21	210	2.98	213	540	5.13	545	400	5.67	406	340	4.82	345	600	5.70	606	520	7.38	527
Massachusetts	Boston	85	2.92	87.92	210	7.20	217	540	12.41	552	400	13.72	414	340	11.66	352	600	13.79	614	520	17.84	538
Michigan	Detroit	85	2.03	87.03	210	5.00	215	540	8.62	549	400	9.53	410	340	8.10	348	600	9.58	610	520	12.39	532
Michigan	Grand Rapids	85	1.97	86.97	210	4.87	215	540	8.39	548	400	9.27	409	340	7.88	348	600	9.32	609	520	12.05	532
Minnesota	Saint Paul	85	2.00	87.00	210	4.95	215	540	8.52	549	400	9.42	409	340	8.01	348	600	9.47	609	520	12.25	532
Mississippi	Jackson	85	-2.95	82.05	210	-7.30	203	540	-12.58	527	400	-13.90	386	340	-11.82	328	600	-13.97	586	520	-18.08	502
Missouri	St. Louis	85	-0.40	84.60	210	-0.98	209	540	-1.68	538	400	-1.86	398	340	-1.58	338	600	-1.87	598	520	-2.42	518
Missouri	Kansas City	85	-1.23	83.77	210	-3.04	207	540	-5.23	535	400	-5.78	394	340	-4.92	335	600	-5.81	594	520	-7.52	512
Montana	Great Falls	85	-6.00	79.00	210	-14.81	195	540	-25.52	514	400	-28.21	372	340	-23.98	316	600	-28.35	572	520	-36.68	483
Nebraska	Omaha	85	0.15	85.15	210	0.36	210	540	0.62	541	400	0.68	401	340	0.58	341	600	0.69	601	520	0.89	521
New Hampshire	Concord	85	4.18	89.18	210	10.33	220	540	17.79	558	400	19.67	420	340	16.72	357	600	19.77	620	520	25.57	546
New Jersey	Newark	85	1.69	86.69	210	4.18	214	540	7.21	547	400	7.97	408	340	6.77	347	600	8.01	608	520	10.36	530
New Mexico	Albuquerque	85	-13.95	71.05	210	-34.46	176	540	-59.37	481	400	-65.64	334	340	-55.79	284	600	-65.97	534	520	-85.33	435
New York	New York	85	1.69	86.69	210	4.18	214	540	7.21	547	400	7.97	408	340	6.77	347	600	8.01	608	520	10.36	530
New York	Syracuse	85	3.06	88.06	210	7.56	218	540	13.03	553	400	14.41	414	340	12.25	352	600	14.48	614	520	18.73	539
Nevada	Las Vegas	85	-9.24	75.76	210	-22.82	187	540	-39.31	501	400	-43.46	357	340	-36.95	303	600	-43.68	556	520	-56.50	463
North Carolina	Charlotte	85	-2.41	82.59	210	-5.95	204	540	-10.26	530	400	-11.34	389	340	-9.64	330	600	-11.40	589	520	-14.74	505
North Dakota	Bismarck	85	1.02	86.02	210	2.53	213	540	4.36	544	400	4.82	405	340	4.09	344	600	4.84	605	520	6.26	526
Ohio	Cincinnati	85	1.45	86.45	210	3.58	214	540	6.16	546	400	6.81	407	340	5.79	346	600	6.85	607	520	8.85	529
Oregon	Portland	85	2.02	87.02	210	5.00	215	540	8.61	549	400	9.51	410	340	8.09	348	600	9.56	610	520	12.37	532
Pennsylvania	Philadelphia	85	1.88	86.88	210	4.65	215	540	8.00	548	400	8.85	409	340	7.52	348	600	8.89	609	520	11.50	532
Pennsylvania	Wilkes-Barre	85	1.07	86.07	210	2.64	213	540	4.55	545	400	5.03	405	340	4.27	344	600	5.05	605	520	6.54	527
Rhode Island	Providence	85	3.16	88.16	210	7.82	218	540	13.47	553	400	14.89	415	340	12.66	353	600	14.96	615	520	19.36	539
South Carolina	Spartanburg	85	-2.32	82.68	210	-5.73	204	540	-9.88	530	400	-10.92	389	340	-9.28	331	600	-10.98	589	520	-14.20	506
South Dakota	Rapid City	85	-5.15	79.85	210	-12.72	197	540	-21.91	518	400	-24.22	376	340	-20.59	319	600	-24.34	576	520	-31.49	489
Tennessee	Knoxville	85	-2.15	82.85	210	-5.32	205	540	-9.17	531	400	-10.14	390	340	-8.62	331	600	-10.19	590	520	-13.18	507
Texas	Houston	85	-3.46	81.54	210	-8.54	201	540	-14.71	525	400	-16.27	384	340	-13.83	326	600	-16.35	584	520	-21.15	499
Utah	Salt Lake City	85	-9.73	75.27	210	-24.03	186	540	-41.40	499	400	-45.77	354	340	-38.90	301	600	-46.00	554	520	-59.50	461
Vermont	Burlington	85	4.40	89.40	210	10.86	221	540	18.71	559	400	20.68	421	340	17.58	358	600	20.79	621	520	26.89	547
Virginia	Alexandria	85	0.27	85.27	210	0.66	211	540	1.14	541	400	1.26	401	340	1.07	341	600	1.26	601	520	1.63	522
Virginia	Lynchburg	85	-1.05	83.95	210	-2.59	207	540	-4.47	536	400	-4.94	395	340	-4.20	336	600	-4.96	595	520	-6.42	514
Washington	Seattle	85	1.10	86.10	210	2.72	213	540	4.68	545	400	5.18	405	340	4.40	344	600	5.20	605	520	6.73	527
Washington	Spokane	85	-2.90	82.10	210	-7.17	203	540	-12.35	528	400	-13.66	386	340	-11.61	328	600	-13.73	586	520	-17.75	502
West Virginia	Charleston	85	-1.21	83.79	210	-3.00	207	540	-5.16	535	400	-5.71	394	340	-4.85	335	600	-5.74	594	520	-7.42	513
Wisconsin	Green Bay	85	3.51	88.51	210	8.67	219	540	14.94	555	400	16.52	417	340	14.04	354	600	16.60	617	520	21.47	541
Wyoming	Cheyenne	85	-13.05	71.95	210	-32.24	178	540	-55.55	484	400	-61.42	339	340	-52.21	288	600	-61.7	538	520	-79.84	440
Puerto Rico	Cayey	85	-6.00	79.00	210	-14.83	195	540	-25.56	514	400	-28.25	372	340	-24.02	316	600	-28.40	572	520	-36.73	483

2.5 TECHNOLOGY SPECIFICATIONS

This section provides the base performance specifications for each technology. Table 2-5 provides the current technology specifications.

2.6 COST ESTIMATION METHODOLOGY

2.6.1 Capital Cost

A summary base capital cost estimate ("Cost Estimate") was developed for each power plant technology, based on a generic facility of a certain size (capacity) and configuration, and assuming a non-specific U.S. location with no unusual location impacts (e.g., urban construction constraints) or infrastructure needs (e.g., a project-dedicated interconnection upgrade cost).

Each Cost Estimate was developed assuming costs in fourth quarter 2010 dollars on an "overnight" capital cost basis. In each Cost Estimate, the total project engineering, procurement and construction ("EPC") cost was organized into the following categories:

- Civil/structural material and installation,
- Mechanical equipment supply and installation,
- Electrical instrumentation and controls ("I&C") supply and installation,
- Project indirect costs, fees and contingency, and
- Owner's costs (excluding project financing costs).

It should be noted that an EPC (turnkey) or equipment supply/balance of plant, as applicable to a given technology, contracting approach was assumed for each of the technologies, which included a risk sharing between the project owner and project construction contractor that, based on our experience, would be required in typical financing markets. This approach does not always result in the lowest cost of construction; however, on average, we believe this approach to result in an achievable cost of construction, given the other considerations discussed herein.

In addition to the base Cost Estimate provided for the given technology, specific regional cost differences were determined. Regional costs for 64 unique locations in the U.S. were analyzed. Eleven subcategories were used (depending on the specific technology under review) to estimate the differences in various regions of the U.S. for the each power plant technology. The regional analyses include but are not limited to assessing the cost differences for outdoor installation considerations, air-cooled condensers versus cooling tower issues, seismic design differences, zero-water discharge issues, local enhancements, remote location issues, urban high-density population issues, labor wage and productivity differences, location adjustments, owner cost differences, and the increase in overheads associated with these 10 locations. More detail with respect to regional differences for each given technology is provided in the following sections.

2.6.1.1 Costing Scope

The *civil and structural costs* include allowance for site preparation, such as clearing, roads, drainage, underground utilities installation, concrete for foundations, piling material, structural steel supply and installation, and buildings.

The *mechanical equipment supply and installation* includes major equipment , including but not limited to, boilers, scrubbers, cooling tower, steam turbine ("ST") generators, PV modules, CTs,

as well as auxiliary equipment such as material handling, fly and bottom ash handling, pumps, condensers, and balance of plant ("BOP") equipment such as fire protection, as applicable to a given technology.

The *electrical and I&C supply and installation* includes electrical transformers, switchgear, motor control centers, switchyards, distributed control systems ("DCS") and instrumentation, and electrical commodities, such as wire, cable tray, and lighting.

While commodities, project equipment, and site assumptions can vary widely from project-to-project for a given technology, the Cost Estimates are based upon a cross section of projects.

The *project indirect costs* include engineering, distributable labor and materials, craft labor overtime and incentives, scaffolding costs, construction management, and start-up and commissioning. The fees and contingency include contractor overhead costs, fees and profit, and construction contingency. Contingency in this category is considered "contractor" contingency, which would be held by a given contractor to mitigate its risk in the construction of a project.

The *owner's costs* include development costs, preliminary feasibility and engineering studies, environmental studies and permitting, legal fees, project management (including third-party management), insurance costs, infrastructure interconnection costs (e.g., gas, electricity), Owner's Contingency, and property taxes during construction. The electrical interconnection cost includes an allowance for the plant switchyard and a subsequent interconnection to an "adjacent" (e.g. within a mile) of the plant, but does not include significant transmission system upgrades.

2.6.2 Operation and Maintenance (O&M) Expenses

O&M expenses consist of non-fuel O&M costs, owner's expenses, and fuel-related expenses. In evaluating the non-fuel O&M expenses for use in the EMM of NEMS, we focused on non-fuel O&M costs associated with the direct operation of the given power plant technology, referred to here as the "Production Related Non-Fuel O&M Expenses," to allow for comparison of O&M costs on the same basis.

Production Related Non-Fuel O&M Expenses include the following categories:

- Fixed O&M ("FOM")
- Variable O&M ("VOM")
- Major Maintenance

Presented below is a brief summary below of the expense categories included within the categories of Fixed O&M, Variable O&M, and Major Maintenance. Further, Sections 3 through 22 provide more specific information related to Production-Related Non-Fuel O&M Expenses for each technology.

Owner's expenses, which are not addressed in this report, include expenses paid by plant owners that are plant specific and can vary significantly between two virtually identical plants in the same geographic region. For example, the owner's expenses include, but are not limited to, property taxes, asset management fees, energy marketing fees, and insurance.

2.6.2.1 Fixed O&M (FOM)

FOM expenses are those expenses incurred at a power plant that do not vary significantly with generation and include the following categories:

- Staffing and monthly fees under pertinent operating agreements
- Typical bonuses paid to the given plant operator
- Plant support equipment which consists of equipment rentals and temporary labor
- Plant-related general and administrative expenses (postage, telephone, etc.)
- Routine preventive and predictive maintenance performed during operations
- Maintenance of structures and grounds
- Other fees required for a project to participate in the relevant National Electric Reliability Council region and be in good standing with the regulatory bodies.

Routine preventive and predictive maintenance expenses do not require an extended plant shutdown and include the following categories:

- Maintenance of equipment such as water circuits, feed pumps, main steam piping, and demineralizer systems
- Maintenance of electric plant equipment, which includes service water, DCS, condensate system, air filters, and plant electrical
- Maintenance of miscellaneous plant equipment such as communication equipment, instrument and service air, and water supply system
- Plant support equipment which consists of tools, shop supplies and equipment rental, and safety supplies.

2.6.2.2 Variable O&M (VOM)

VOM expenses are production-related costs which vary with electrical generation and include the following categories, as applicable to the given power plant technology:

- Raw water
- Waste and wastewater disposal expenses
- Purchase power (which is incurred inversely to operating hours), demand charges and related utilities
- Chemicals, catalysts and gases
- Ammonia ("NH_3") for selective catalytic reduction ("SCR"), as applicable
- Lubricants
- Consumable materials and supplies.

2.6.2.3 Major Maintenance

Major maintenance expenses generally require an extended outage, are typically undertaken no more than once per year; and are assumed to vary with electrical generation or the number of

plant starts based on the given technology and specific original equipment manufacturer recommendations and requirements. These major maintenance expenses include the following expense categories:

- Scheduled major overhaul expenses for maintaining the prime mover equipment at a power plant
- Major maintenance labor
- Major maintenance spares parts costs
- BOP major maintenance, which is major maintenance on the equipment at the given plant that cannot be accomplished as part of routine maintenance or while the unit is in commercial operation.

TABLE 2-5 – TECHNOLOGY PERFORMANCE SPECIFICATIONS

Technology	Fuel	Nominal Capacity (kW) (1)	Nominal Heat Rate (Btu/kWh) (2)	Capital Cost ($/kW) (3)	Fixed O&M ($/kW-yr) (4)	Variable O&M ($/MWh) (5)	SO_2 (lb/ MMBtu (6)	NO_X (lb/MMBtu)	CO_2 (lb/MMBtu)
Advanced Pulverized Coal	Coal	650,000	8,800	3,167	35.97	4.25	0.1 (6)	0.06	206 (7)
Advanced Pulverized Coal	Coal	1,300,000	8,800	2,844	29.67	4.25	0.1 (6)	0.06	206 (7)
Advanced Pulverized Coal with CCS	Coal	650,000	12,000	5,099	76.62	9.05	0.02 (8)	0.06	20.6 (9)
Advanced Pulverized Coal with CCS	Coal	1,300,000	12,000	4,579	63.21	9.05	0.02 (8)	0.06	20.6 (9)
NGCC	Gas	540,000	7,050	978	14.39	3.43	0.001	0.0075 (13)	117 (14)
AG-NGCC	Gas	400,000	6,430	1,003	14.62	3.11	0.001	0.0075 (13)	117 (14)
Advanced NGCC with CCS	Gas	340,000	7,525	2,060	30.25	6.45	0.001	0.0075 (13)	12 (15)
Conventional CT	Gas	85,000	10,850	974	6.98	14.70	0.001	0.03 (12)	117 (14)
Advanced CT	Gas	210,000	9,750	665	6.70	9.87	0.001	0.03 (13)	117 (14)
IGCC	Coal	600,000	8,700	3,565	59.23	6.87	0.025 (10)	0.0075 (12)	206 (14)
IGCC	Coal	1,200,000	8,700	3,221	48.90	6.87	0.025 (10)	0.0075 (12)	206 (14)
IGCC with CCS	Coal	520,000	10,700	5,348	69.30	8.04	0.015 (11)	0.0075 (12)	20.6 (14)
Advanced Nuclear	Uranium	2,236,000	N/A	5,339	88.75	2.04	0	0	0
Biomass Combined Cycle	Biomass	20,000	12,350	7,894	338.79	16.64	0	0.054	195 (14)
Biomass BFB	Biomass	50,000	13,500	3,860	100.50	5.00	0	0.08	195 (14)
Fuel Cells	Gas	10,000	9,500	6,835	350	0	0.00013	0.013	130
Geothermal – Dual Flash	Geothermal	50,000	N/A	5,578	84.27	9.64	0.2 (16)	0	120 (17)
Geothermal – Binary	Geothermal	50,000	N/A	4,141	84.27	9.64	0.2 (16)	0	120 (17)
MSW	MSW	50,000	18,000	8,232	373.76	8.33	0.07 (18)	0.27 (19)	200
Hydroelectric	Hydro	500,000	N/A	3,076	13.44	0	0	0	0
Pumped Storage	Hydro	250,000	N/A	5,595	13.03	0	0	0	0
Onshore Wind	Wind	100,000	N/A	2,438	28.07	0	0	0	0
Offshore Wind	Wind	400,000	N/A	5,975	53.33	0	0	0	0
Solar Thermal	Solar	100,000	N/A	4,692	64.00	0	0	0	0
Photovoltaic	Solar	7,000	N/A	6,050	26.04	0	0	0	0
Photovoltaic	Solar	150,000	N/A	4,755	16.70	0	0	0	0

Footnotes are listed on the next page.

(1) Capacity is net of auxiliary loads.
(2) Heat Rate is on a HHV basis for British thermal units per kilowatt-hour ("Btu/kWh").
(3) Capital Cost excludes financing-related costs (e.g., fees, interest during construction).
(4) FOM expenses exclude owner's costs (e.g., insurance, property taxes, and asset management fees).
(5) VOM expenses include major maintenance.
(6) Million Btu ("MMBtu").
(7) Based on high sulfur bituminous fuel. Emission rate could be lower for sub-bituminous fuel.
(8) From greenhouse gas ("GHG") Reporting Rule for Bituminous Coal.
(9) SO_2 emission rates are lower than in the non-capture case to avoid reagent contamination.
(10) Assuming 90 percent capture.
(11) Assuming 3 percent sulfur coal at 12,000 British thermal units per pound ("Btu/lb") and a 99.5 percent sulfur removal rate.
(12) Assuming 3 percent sulfur coal at 12,000 Btu/lb and a 99.7 percent sulfur removal rate.
(13) Assuming 9 parts per million volume dry ("ppmvd") corrected to 15 percent O_2; simple-cycle E-Class or F-Class engine.
(14) Assuming 2 ppmvd corrected to 15 percent O_2 for F-Class engine. Assumes development of SCR for IGCC with CCS.
(15) From GHG Reporting Rule for Pipeline Natural Gas.
(16) Assuming 90 percent capture.
(17) Reported as pounds per MWh and as H_2S – actual will vary with resource.
(18) Reported as pounds per MWh – actual will vary with resource.
(19) Based on 30 ppmvd at 7 percent O_2 – 5,000 Btu/lb HHV of MSW.
(20) Based on 150 ppmvd at 7 percent O_2 - 5,000 Btu/lb HHV of MSW.

3. ADVANCED PULVERIZED COAL (APC)

3.1 MECHANICAL EQUIPMENT AND SYSTEMS

The following describes the Advanced Pulverized Coal Facility, which is a nominal 650 MW coal-fired supercritical steam-electric generating unit built in a Greenfield location. An analysis is also provided for a nominally 1,300 MW coal-fired supercritical steam-electric generating unit built in a Greenfield location, which is essentially a dual-unit configuration, based on doubling the single-unit description provided below; however, a detailed technical description (due to the similarities/duplication with the single unit) is not provided herein. This unit employs a supercritical Rankine power cycle in which coal is burned to produce steam in a boiler, which is expanded through a ST to produce electric power. The steam is then condensed to water and pumped back to the boiler to be converted to steam once again to complete the cycle.

The unit will operate at steam conditions of up to 3,700 pounds per square inch-absolute ("psia") and 1,050 degrees Fahrenheit ("ºF") at the ST inlet. The superheated steam produced in the boiler is supplied to the ST, which drives an electric generator. After leaving the high-pressure ("HP") ST, the steam is reheated and fed to the intermediate-pressure ("IP") ST. In the low-pressure ("LP") ST, the steam admitted directly from the IP ST expands to condenser pressure and is condensed in the condenser. Cooling tower water is used for the condensing process. Condensate collected in the condenser hotwell is discharged by the main condensate pumps and returned to the deaerator/feedwater storage tank via the LP feedwater heaters. The feedwater pumps discharge feedwater from the feedwater storage tank to the boiler via the HP feedwater heaters. In the boiler, the supercritical fluid is heated for return to the ST.

The combustion air and flue gas systems are designed for balanced draft and starts with the ambient air drawn in by the forced draft fans. This air is heated by steam preheaters and the regenerative air heaters. Some of the air is passed through the primary air fans for use in drying and conveying the pulverized coal to the boiler. The air and coal combust in the boiler furnace and the flue gas passes through the furnace and back passes of the boiler, giving up heat to the supercritical fluid in the boiler tubes. The flue gas exiting the boiler economizer enters the SCR equipment for NO_X reduction and into the regenerative air heaters where it transfers heat to the incoming air. From the regenerative air heaters, the flue gas is treated with an injection of hydrated lime, enters a pulse-jet fabric filter (baghouse) for the collection of particulate material, and then flows to the induced draft fans. From the fans, gas enters the Wet Flue Gas Desulfurization ("WFGD") absorber. From the absorber, the flue gas discharges into the stack. Figure 3-1 presents the Advanced Pulverized Coal process flow diagram.

FIGURE 3-1 – ADVANCED PULVERIZED COAL DESIGN CONFIGURATION

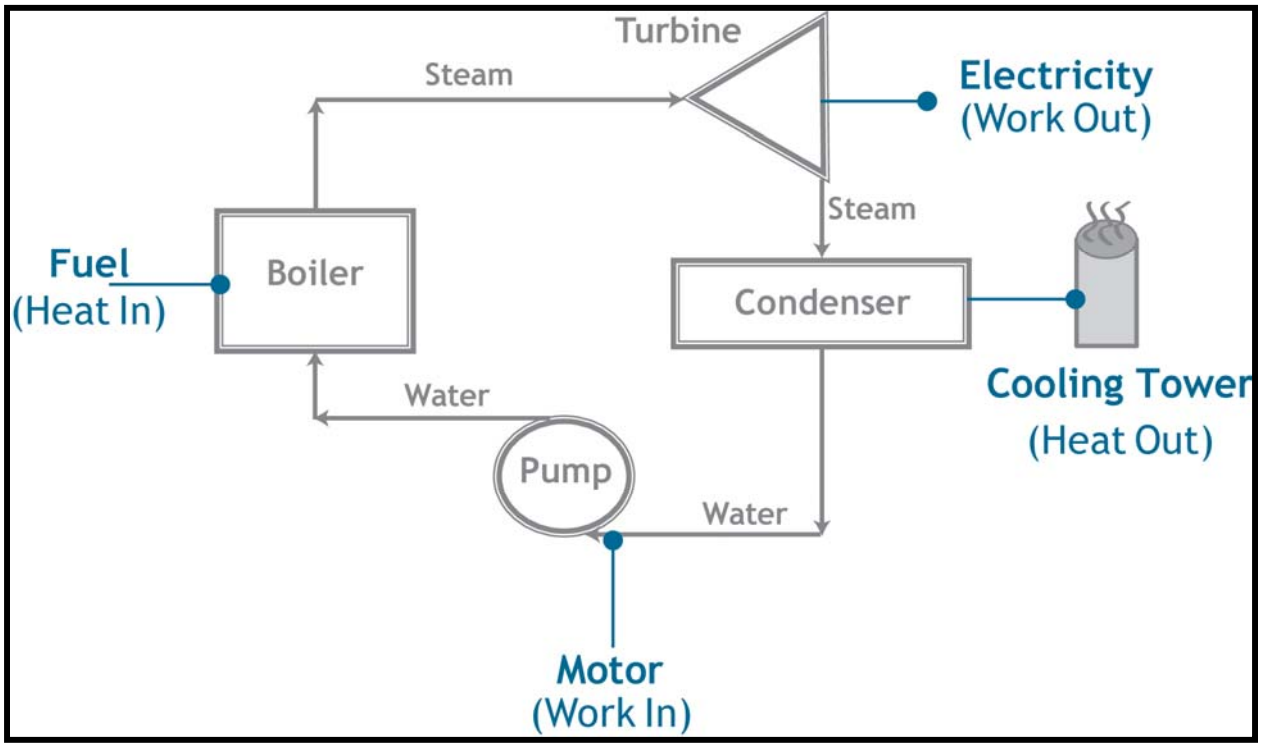

3.2 ELECTRICAL AND CONTROL SYSTEMS

The Advanced Pulverized Coal Facility has one ST electric generator. The generator is a 60 Hertz ("Hz") machine rated at approximately 800 mega-volt-amperes ("MVA") with an output voltage of 24 kilovolts ("kV"). The ST electric generator is directly connected to generator step-up transformer ("GSU"), which in turn is connected between two circuit breakers in the high-voltage bus in the Advanced Pulverized Coal Facility switchyard through a disconnect switch. The GSU increases the voltage from the electric generator from 24 kV to interconnected transmission system high voltage.

The Advanced Pulverized Coal Facility is controlled using a DCS. The DCS provides centralized control of the plant by integrating the control systems provided with the boiler, ST and associated electric generator and the control of BOP systems and equipment.

3.3 OFF-SITE REQUIREMENTS

Coal is delivered to the facility via rail, truck or barge. Water for all processes at the Advanced Pulverized Coal Facility can be obtained from one of a variety of sources; however, water is typically sourced from an adjacent river, when possible. The Advanced Pulverized Coal Facility uses a water treatment system and a high-efficiency reverse osmosis system to reduce the dissolved solids from the cooling water and to provide distilled water for boiler makeup. Wastewater is sent to an adjacent river or other approved alternative. Further, the electrical interconnection from the Advanced Pulverized Coal on-site switchyard is effectuated by a connection to an adjacent utility substation, assumed to be no more than 1 mile from the Advanced Pulverized Coal Facility.

3.4 CAPITAL COST ESTIMATE

The base Cost Estimate for the Advanced Pulverized Coal Facility ("APC") with a nominal capacity of 650 MW is $3,167/kilowatt ("kW") and with a nominal capacity of 1,300 MW is $2,844/kW. Table 3-1 and Table 3-2 summarize the Cost Estimate categories for the APC Facility.

TABLE 3-1 – BASE PLANT SITE CAPITAL COST ESTIMATE FOR APC

Technology:	**APC**	
Nominal Capacity (ISO):	**650,000 kW**	
Nominal Heat Rate (ISO):	**8,800 Btu/kWh-HHV**	
Capital Cost Category		**(000s) (October 1, 2010$)**
Civil Structural Material and Installation		**224,000**
Mechanical Equipment Supply and Installation		**838,500**
Electrical / I&C Supply and Installation		**123,000**
Project Indirects (1)		**350,000**
EPC Cost before Contingency and Fee		**1,535,500**
Fee and Contingency		**180,000**
Total Project EPC		**1,715,500**
Owner's Costs (excluding project finance)		**343,100**
Total Project Cost (excluding finance)		**2,058,600**
Total Project EPC	**$ / kW**	**2,639**
Owner Costs 20% (excluding project finance)	**$ / kW**	**528**
Total Project Cost (excluding project finance)	**$ / kW**	**3,167**

(1) Includes engineering, distributable costs, scaffolding, construction management, and start-up.

TABLE 3-2 – BASE PLANT SITE CAPITAL COST ESTIMATE FOR APC

Technology:	APC
Nominal Capacity (ISO):	1,300,000 kW
Nominal Heat Rate (ISO):	8,800 Btu/kWh-HHV

Capital Cost Category		(000s) (October 1, 2010$)
Civil Structural Material and Installation		397,250
Mechanical Equipment Supply and Installation		1,596,100
Electrical / I&C Supply and Installation		235,000
Project Indirects (1)		584,750
EPC Cost before Contingency and Fee		2,813,100
Fee and Contingency		320,000
Total Project EPC		3,133,100
Owner Costs (excluding project finance)		563,958
Total Project Cost (excluding finance)		3,697,058
Total Project EPC	$ / kW	2,410
Owner Costs 18% (excluding project finance)	$ / kW	434
Total Project Cost (excluding project finance)	$ / kW	2,844

(1) Includes engineering, distributable costs, scaffolding, construction management, and start-up.

For this type of technology and power plant configuration, our regional adjustments took into consideration the following: outdoor installation considerations, seismic design differences, remote location issues, labor wage and productivity differences, location adjustments, owner cost differences, and the increase in overheads associated with these six adjustment criteria.

Outdoor installation locations are considered in geographic areas where enclosed structures for the boilers would not be required due to the low probability of freezing. The locations that were included in outdoor installation are Alabama, Arizona, Arkansas, Florida, Georgia, Hawaii, Louisiana, Mississippi, New Mexico, South Carolina, and Puerto Rico.

Seismic design differences among the various locations were based on U.S. seismic map information that detailed the various seismic zones throughout the U.S. No cost increases were associated with seismic Zone 0 and cost step increases were considered for Zones 1, 2, 3 and 4.

Remote location issues are related to geographic areas that typically require installation of man camps, higher craft incentives, and higher per diems are generally required with respect to construction, due to the fact that such areas are long distances from urban areas, where labor is generally abundant. Remote location designations were also considered in locations where higher equipment freight costs are typically incurred, which for example are regions not near established rail or highway access. Remote locations related to the APC Facility include Fairbanks, Alaska; Honolulu, Hawaii; Albuquerque, New Mexico; Cheyenne, Wyoming; and Cayey, Puerto Rico.

Labor wage and productivity differences were handled as discussed in Section 1.5.1, taking into consideration the amount of labor we estimated for the APC Facility.

Location adjustments were made to locations where higher cost of living levels are incurred and/or where population density generally correlates to higher construction costs for power and other infrastructure projects. These locations include Alaska, California, Connecticut, Delaware, District of Columbia, Hawaii, Illinois, Maine, Maryland, Massachusetts, Michigan, Minnesota, New York, Ohio; and Wisconsin.

Owner costs were reviewed based on the need for utility upgrades and/or infrastructure costs such as new facility transmission lines to tie to existing utility transmission substations or existing transmission lines.

Table 3-3 and Table 3-4 show the APC capital cost variations for alternative U.S. plant locations, including the difference between the given location and the average location specified for the Cost Estimate.

TABLE 3-3 – LOCATION-BASED COSTS FOR APC (650,000 KW)

(OCTOBER 1, 2010 DOLLARS)

State	City	Base Project Cost ($/kW)	Location Percent Variation	Delta Cost Difference ($/kW)	Total Location Project Cost ($/kW)
Alaska	Anchorage	3,200	33.1%	1,058	4,258
Alaska	Fairbanks	3,200	32.0%	1,026	4,226
Alabama	Huntsville	3,200	-7.5%	(239)	2,961
Arizona	Phoenix	3,200	-5.2%	(166)	3,034
Arkansas	Little Rock	3,200	-5.4%	(174)	3,026
California	Los Angeles	3,200	20.3%	649	3,849
California	Redding	3,200	9.8%	314	3,514
California	Bakersfield	3,200	9.4%	300	3,500
California	Sacramento	3,200	14.4%	462	3,662
California	San Francisco	3,200	42.4%	1,356	4,556
Colorado	Denver	3,200	-6.1%	(194)	3,006
Connecticut	Hartford	3,200	26.6%	851	4,051
Delaware	Dover	3,200	23.0%	736	3,936
District of Columbia	Washington	3,200	39.6%	1,267	4,467
Florida	Tallahassee	3,200	-10.9%	(349)	2,851
Florida	Tampa	3,200	-4.9%	(156)	3,044
Georgia	Atlanta	3,200	-8.1%	(260)	2,940
Hawaii	Honolulu	0	0	0	0
Idaho	Boise	3,200	-3.7%	(118)	3,082
Illinois	Chicago	3,200	19.8%	635	3,835
Indiana	Indianapolis	3,200	3.2%	102	3,302

State	City	Base Project Cost ($/kW)	Location Percent Variation	Delta Cost Difference ($/kW)	Total Location Project Cost ($/kW)
Iowa	Davenport	3,200	-1.6%	(50)	3,150
Iowa	Waterloo	3,200	-9.0%	(288)	2,912
Kansas	Wichita	3,200	-6.7%	(215)	2,985
Kentucky	Louisville	3,200	-5.6%	(178)	3,022
Louisiana	New Orleans	3,200	-11.2%	(359)	2,841
Maine	Portland	3,200	-0.6%	(21)	3,179
Maryland	Baltimore	3,200	4.6%	148	3,348
Massachusetts	Boston	3,200	35.3%	1,128	4,328
Michigan	Detroit	3,200	3.8%	123	3,323
Michigan	Grand Rapids	3,200	-7.9%	(251)	2,949
Minnesota	St. Paul	3,200	3.9%	125	3,325
Mississippi	Jackson	3,200	-7.4%	(238)	2,962
Missouri	St. Louis	3,200	7.2%	231	3,431
Missouri	Kansas City	3,200	3.4%	109	3,309
Montana	Great Falls	3,200	-4.3%	(137)	3,063
Nebraska	Omaha	3,200	-3.5%	(113)	3,087
New Hampshire	Concord	3,200	-1.6%	(52)	3,148
New Jersey	Newark	3,200	15.5%	495	3,695
New Mexico	Albuquerque	3,200	-3.9%	(125)	3,075
New York	New York	3,200	32.6%	1,044	4,244
New York	Syracuse	3,200	10.7%	342	3,542
Nevada	Las Vegas	3,200	9.2%	295	3,495
North Carolina	Charlotte	3,200	-9.6%	(308)	2,892
North Dakota	Bismarck	3,200	-8.0%	(255)	2,945
Ohio	Cincinnati	3,200	0.3%	11	3,211
Oregon	Portland	3,200	9.5%	305	3,505
Pennsylvania	Philadelphia	3,200	12.1%	387	3,587
Pennsylvania	Wilkes-Barre	3,200	-3.5%	(112)	3,088
Rhode Island	Providence	3,200	4.1%	132	3,332
South Carolina	Spartanburg	3,200	-11.8%	(377)	2,823
South Dakota	Rapid City	3,200	-10.7%	(342)	2,858
Tennessee	Knoxville	3,200	-8.9%	(286)	2,914
Texas	Houston	3,200	-9.5%	(304)	2,896
Utah	Salt Lake City	3,200	-3.1%	(98)	3,102
Vermont	Burlington	3,200	-5.3%	(169)	3,031
Virginia	Alexandria	3,200	9.7%	310	3,510
Virginia	Lynchburg	3,200	-2.0%	(62)	3,138
Washington	Seattle	3,200	12.8%	409	3,609
Washington	Spokane	3,200	-2.3%	(74)	3,126
West Virginia	Charleston	3,200	-1.8%	(58)	3,142
Wisconsin	Green Bay	3,200	0.5%	16	3,216
Wyoming	Cheyenne	3,200	3.9%	125	3,325
Puerto Rico	Cayey	0	0	0	0

TABLE 3-4 – LOCATION-BASED COSTS FOR APC (1,300,000 KW)

(OCTOBER 1, 2010 DOLLARS)

State	City	Base Project Cost ($/kW)	Location Percent Variation	Delta Cost Difference ($/kW)	Total Location Project Cost ($/kW)
Alaska	Anchorage	2,850	36.5%	1,040	3,890
Alaska	Fairbanks	2,850	35.3%	1,006	3,856
Alabama	Huntsville	2,850	-8.2%	(233)	2,617
Arizona	Phoenix	2,850	-5.7%	(161)	2,689
Arkansas	Little Rock	2,850	-5.9%	(169)	2,681
California	Los Angeles	2,850	22.4%	638	3,488
California	Redding	2,850	10.7%	306	3,156
California	Bakersfield	2,850	10.3%	293	3,143
California	Sacramento	2,850	15.7%	447	3,297
California	San Francisco	2,850	46.7%	1,330	4,180
Colorado	Denver	2,850	-6.6%	(188)	2,662
Connecticut	Hartford	2,850	29.4%	838	3,688
Delaware	Dover	2,850	25.5%	728	3,578
District of Columbia	Washington	2,850	44.4%	1,265	4,115
Florida	Tallahassee	2,850	-11.9%	(339)	2,511
Florida	Tampa	2,850	-5.4%	(154)	2,696
Georgia	Atlanta	2,850	-8.9%	(253)	2,597
Hawaii	Honolulu	0	0	0	0
Idaho	Boise	2,850	-4.0%	(115)	2,735
Illinois	Chicago	2,850	21.3%	606	3,456
Indiana	Indianapolis	2,850	3.5%	99	2,949
Iowa	Davenport	2,850	-1.8%	(53)	2,797
Iowa	Waterloo	2,850	-9.8%	(280)	2,570
Kansas	Wichita	2,850	-7.3%	(209)	2,641
Kentucky	Louisville	2,850	-6.1%	(173)	2,677
Louisiana	New Orleans	2,850	-12.2%	(348)	2,502
Maine	Portland	2,850	-0.6%	(16)	2,834
Maryland	Baltimore	2,850	5.3%	150	3,000
Massachusetts	Boston	2,850	38.7%	1,103	3,953
Michigan	Detroit	2,850	4.0%	114	2,964
Michigan	Grand Rapids	2,850	-8.6%	(244)	2,606
Minnesota	St. Paul	2,850	4.1%	116	2,966
Mississippi	Jackson	2,850	-8.1%	(231)	2,619
Missouri	St. Louis	2,850	7.7%	221	3,071
Missouri	Kansas City	2,850	3.5%	101	2,951
Montana	Great Falls	2,850	-4.7%	(133)	2,717
Nebraska	Omaha	2,850	-3.9%	(111)	2,739
New Hampshire	Concord	2,850	-1.8%	(52)	2,798
New Jersey	Newark	2,850	16.4%	467	3,317
New Mexico	Albuquerque	2,850	-4.3%	(122)	2,728
New York	New York	2,850	34.8%	992	3,842
New York	Syracuse	2,850	12.0%	341	3,191
Nevada	Las Vegas	2,850	9.9%	282	3,132
North Carolina	Charlotte	2,850	-10.4%	(296)	2,554
North Dakota	Bismarck	2,850	-8.7%	(248)	2,602
Ohio	Cincinnati	2,850	0.5%	13	2,863
Oregon	Portland	2,850	10.4%	297	3,147
Pennsylvania	Philadelphia	2,850	12.9%	366	3,216
Pennsylvania	Wilkes-Barre	2,850	-3.8%	(109)	2,741

State	City	Base Project Cost ($/kW)	Location Percent Variation	Delta Cost Difference ($/kW)	Total Location Project Cost ($/kW)
Rhode Island	Providence	2,850	4.3%	123	2,973
South Carolina	Spartanburg	2,850	-12.7%	(363)	2,487
South Dakota	Rapid City	2,850	-11.6%	(331)	2,519
Tennessee	Knoxville	2,850	-9.7%	(276)	2,574
Texas	Houston	2,850	-10.3%	(295)	2,555
Utah	Salt Lake City	2,850	-3.3%	(93)	2,757
Vermont	Burlington	2,850	-5.8%	(164)	2,686
Virginia	Alexandria	2,850	10.9%	310	3,160
Virginia	Lynchburg	2,850	-2.0%	(57)	2,793
Washington	Seattle	2,850	13.9%	397	3,247
Washington	Spokane	2,850	-2.6%	(73)	2,777
West Virginia	Charleston	2,850	-2.1%	(59)	2,791
Wisconsin	Green Bay	2,850	0.6%	16	2,866
Wyoming	Cheyenne	2,850	4.6%	131	2,981
Puerto Rico	Cayey	0	0	0	0

3.5 O&M ESTIMATE

In addition to the general O&M items discussed in Section 2.5.2., the APC Facility includes the major maintenance for boiler, ST, associated generator, BOP, and emissions reduction catalysts. These major maintenance expenses are included with the VOM expense for this technology and are given on an average basis across the megawatt-hours ("MWh") incurred. Typically, significant overhauls on an APC Facility occur no less frequently than six or seven years. Table 3-5 presents the FOM and VOM expenses for the APC Facility. Table 3-5 and Table 3-6 present the O&M expenses for the APC Facility.

TABLE 3-5 – O&M EXPENSES FOR APC (650,000 KW)

Technology:	APC
Fixed O&M Expense	$35.97/kW-year
Variable O&M Expense	$4.25/MWh

TABLE 3-6 – O&M EXPENSES FOR APC (1,300,000 KW)

Technology:	APC
Fixed O&M Expense	$29.67/kW-year
Variable O&M Expense	$4.25/MWh

3.6 ENVIRONMENTAL COMPLIANCE INFORMATION

As mentioned in Section 3.1, the APC Facility is assumed to include low NO_X combustion burners in the boiler, SCR, and a flue gas desulfurization ("FGD") to further control the emissions of NO_X and SO_2, respectively. Table 3-7 presents the environmental emissions for the APC Facility.

TABLE 3-7 – ENVIRONMENTAL EMISSIONS FOR APC

Technology:	APC
NO_X	0.06 lb/MMBtu
SO_2	0.1 lb/MMBtu
CO_2	206 lb/MMBtu

4. ADVANCED PULVERIZED COAL WITH CCS (APC/CCS)

4.1 MECHANICAL EQUIPMENT AND SYSTEMS

The plant configuration for the APC with CCS Facility ("APC/CCS") is the same as the APC case with two exceptions: (1) an amine scrubbing system, utilizing monoethanolamine ("MEA") as a solvent, to capture CO_2 from the flue gas, and (2) the scaling of the boiler to a larger size, as described below. The captured CO_2 is compressed to approximately 2,000 psia for injection into a pipeline at the plant fence line as a supercritical fluid. The net output of the APC/CCS Facility case is 650 MW (and 1,300 MW for the two unit configuration), and since the CCS system requires about one-third of the given facility's gross capacity in auxiliary load, the APC/CCS Facility assumes that the boiler is increased by approximately one-third (i.e., it is approximately 133 percent the size of the boiler in the APC Facility), which provides the necessary steam to facilitate the capture process and to run a steam-driven compressor for compressing the CO_2 for sequestration. Figure 4-1 presents a diagram of the APC and Figure 4-2 presents a diagram of the APC/CCS Facility.

FIGURE 4-1 – APC FACILITY DIAGRAM

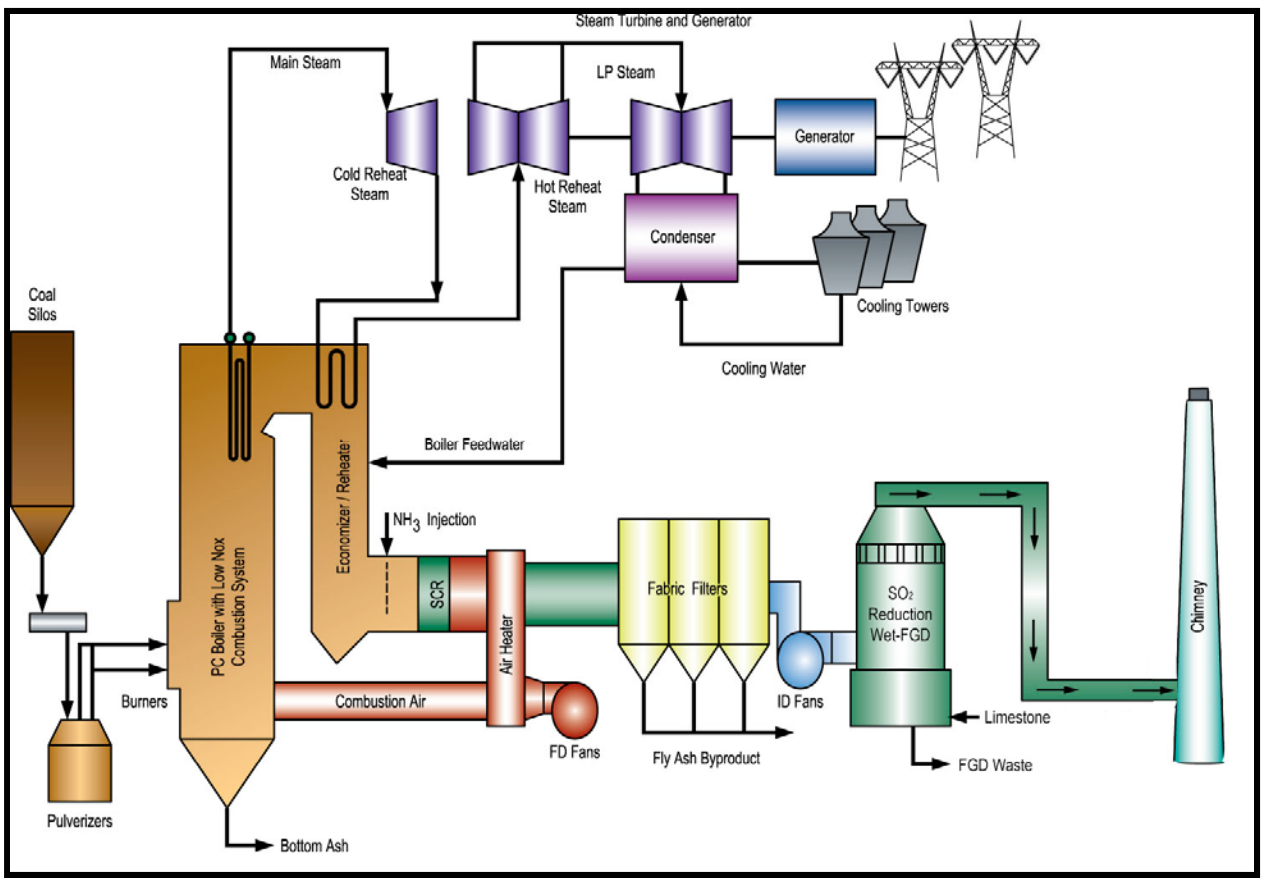

FIGURE 4-2 – APC/CCS FACILITY DIAGRAM

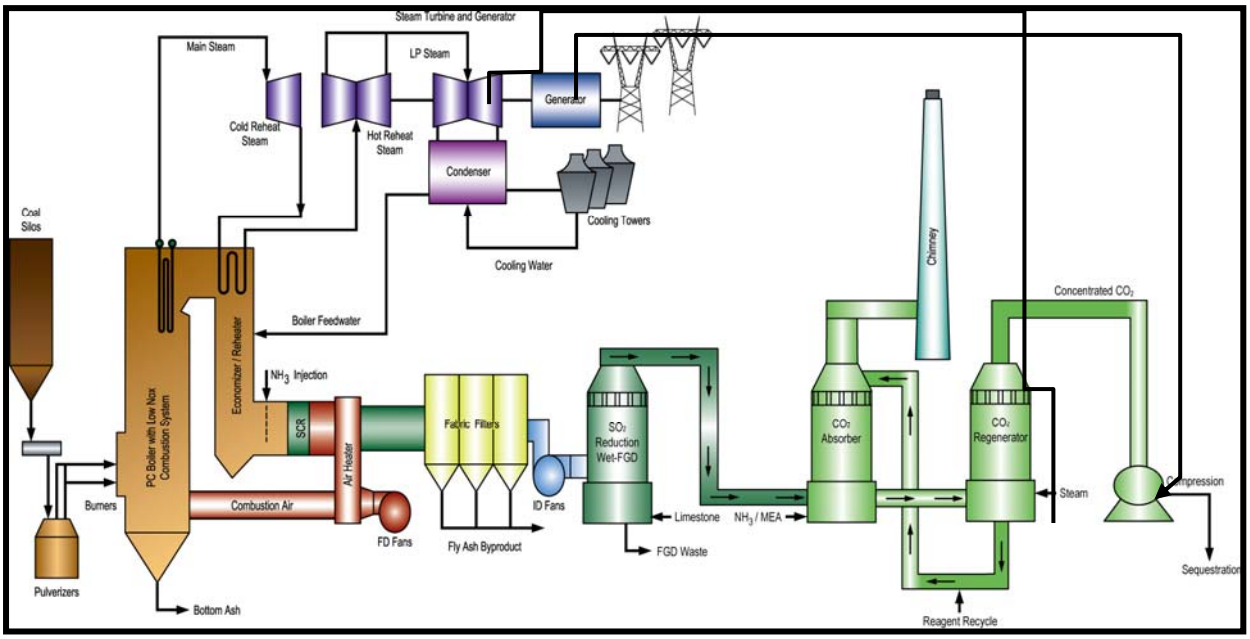

4.2 ELECTRICAL AND CONTROL SYSTEMS

The electrical and control systems for the APC/CCS Facility are materially similar to the APC Facility.

4.3 OFF-SITE REQUIREMENTS

The off-site requirements for the APC/CCS Facility are materially similar to the APC Facility, except that the CO_2 needs sequestering in one of the following geologic formations: (1) exhausted gas storage location, (2) unminable coal seam, (3) enhanced oil recovery, or (4) saline aquifer. To the extent that a sequestration site is not near the given facility being analyzed, transportation for a viable sequestration site has the potential to materially affect the capital cost estimates discussed below.

4.4 CAPITAL COST ESTIMATE

The base Cost Estimate for the APC/CCS Facility with a nominal capacity of 650 MW is $5,099/kW and with a nominal capacity of 1,300,000 MW is $4,579/kW. The capital cost estimate was based on the advanced pulverized APC Facility (without CCS) and the base Cost Estimate was increased to include the expected costs of CCS. Since there are currently no full-scale pulverized coal facilities operating with CCS in the world, our estimate is based on industry research. Our team tested the veracity of this research against assumptions for implementing the additional equipment necessary to effectuate CCS on an advanced coal facility. Table 4-1 and Table 4-2 summarize the Cost Estimate categories for the APC/CCS Facility.

TABLE 4-1 – BASE PLANT SITE CAPITAL COST ESTIMATE FOR APC/CCS

Technology:	**APC/CCS**	
Nominal Capacity (ISO):	**650,000 kW**	
Nominal Heat Rate (ISO):	**12,000 Btu/kWh-HHV**	
Capital Cost Category		**(000s) (October 1, 2010$)**
Total Project EPC		**2,761,958**
Owner Costs (excluding project finance)		**552,391**
Total Project Cost (excluding finance)		**3,314,350**
Total Project EPC	**/ kW**	**4,249**
Owner Costs 20% (excluding project finance)	**/ kW**	**850**
Total Project Cost (excluding project finance)	**/ kW**	**5,099**

(1) Includes engineering, distributable costs, scaffolding, construction management, and start-up.

TABLE 4-2 – BASE PLANT SITE CAPITAL COST ESTIMATE FOR APC/CCS

Technology:	**APC/CCS**	
Nominal Capacity (ISO):	**1,300,000 kW**	
Nominal Heat Rate (ISO):	**12,000 Btu/kWh-HHV**	
Capital Cost Category		**(000s) (October 1, 2010$)**
Total Project EPC		**5,045,763**
Owner Costs (excluding project finance)		**908,237**
Total Project Cost (excluding finance)		**5,954,000**
Total Project EPC	**/ kW**	**3,881**
Owner Costs 18% (excluding project finance)	**/ kW**	**699**
Total Project Cost (excluding project finance)	**/ kW**	**4,580**

(1) Includes engineering, distributable costs, scaffolding, construction management, and start-up.

For this type of technology and power plant configuration, our regional adjustments took into consideration the following: outdoor installation considerations, seismic design differences, remote location issues, labor wage and productivity differences, location adjustments, owner cost differences, and the increase in overheads associated with these six adjustment criteria. The

methodology used for the APC/CCS Facility is the same as that discussed in Section 3.4 for the APC Facility (without CCS).

Table 4-3 and Table 4-4 show the APC capital cost variations for alternative U.S. plant locations, including the difference between the given location and the average location specified for the Cost Estimate.

TABLE 4-3– LOCATION-BASED COSTS FOR APC/CCS FACILITY (650,000 KW)

(OCTOBER 1, 2010 DOLLARS)

State	City	Base Project Cost ($/kW)	Location Percent Variation	Delta Cost Difference ($/kW)	Total Location Project Cost ($/kW)
Alaska	Anchorage	5,100	32.2%	1,643	6,743
Alaska	Fairbanks	5,100	31.4%	1,602	6,702
Alabama	Huntsville	5,100	-8.0%	(409)	4,691
Arizona	Phoenix	5,100	-5.7%	(289)	4,811
Arkansas	Little Rock	5,100	-5.9%	(303)	4,797
California	Los Angeles	5,100	19.6%	1,000	6,100
California	Redding	5,100	9.4%	481	5,581
California	Bakersfield	5,100	9.0%	458	5,558
California	Sacramento	5,100	14.4%	734	5,834
California	San Francisco	5,100	41.6%	2,124	7,224
Colorado	Denver	5,100	-6.6%	(335)	4,765
Connecticut	Hartford	5,100	25.6%	1,306	6,406
Delaware	Dover	5,100	21.9%	1,116	6,216
District of Columbia	Washington	5,100	37.0%	1,888	6,988
Florida	Tallahassee	5,100	-11.6%	(591)	4,509
Florida	Tampa	5,100	-5.1%	(262)	4,838
Georgia	Atlanta	5,100	-8.7%	(445)	4,655
Hawaii	Honolulu	0	0	0	0
Idaho	Boise	5,100	-4.1%	(211)	4,889
Illinois	Chicago	5,100	20.7%	1,055	6,155
Indiana	Indianapolis	5,100	2.8%	141	5,241
Iowa	Davenport	5,100	-1.7%	(85)	5,015
Iowa	Waterloo	5,100	-9.6%	(491)	4,609
Kansas	Wichita	5,100	-7.3%	(372)	4,728
Kentucky	Louisville	5,100	-6.1%	(309)	4,791
Louisiana	New Orleans	5,100	-11.9%	(608)	4,492
Maine	Portland	5,100	-1.4%	(72)	5,028
Maryland	Baltimore	5,100	3.8%	195	5,295
Massachusetts	Boston	5,100	34.9%	1,779	6,879
Michigan	Detroit	5,100	4.0%	204	5,304
Michigan	Grand Rapids	5,100	-8.4%	(428)	4,672
Minnesota	St. Paul	5,100	4.0%	206	5,306
Mississippi	Jackson	5,100	-8.0%	(406)	4,694
Missouri	St. Louis	5,100	7.2%	366	5,466

State	City	Base Project Cost ($/kW)	Location Percent Variation	Delta Cost Difference ($/kW)	Total Location Project Cost ($/kW)
Missouri	Kansas City	5,100	3.4%	174	5,274
Montana	Great Falls	5,100	-4.8%	(244)	4,856
Nebraska	Omaha	5,100	-3.9%	(197)	4,903
New Hampshire	Concord	5,100	-2.0%	(100)	5,000
New Jersey	Newark	5,100	16.4%	837	5,937
New Mexico	Albuquerque	5,100	-4.4%	(222)	4,878
New York	New York	5,100	34.7%	1,768	6,868
New York	Syracuse	5,100	8.5%	433	5,533
Nevada	Las Vegas	5,100	7.5%	382	5,482
North Carolina	Charlotte	5,100	-10.5%	(534)	4,566
North Dakota	Bismarck	5,100	-8.5%	(434)	4,666
Ohio	Cincinnati	5,100	-0.3%	(13)	5,087
Oregon	Portland	5,100	9.1%	466	5,566
Pennsylvania	Philadelphia	5,100	12.7%	649	5,749
Pennsylvania	Wilkes-Barre	5,100	-3.9%	(201)	4,899
Rhode Island	Providence	5,100	4.2%	214	5,314
South Carolina	Spartanburg	5,100	-12.7%	(649)	4,451
South Dakota	Rapid City	5,100	-11.4%	(583)	4,517
Tennessee	Knoxville	5,100	-9.6%	(492)	4,608
Texas	Houston	5,100	-10.2%	(518)	4,582
Utah	Salt Lake City	5,100	-3.8%	(194)	4,906
Vermont	Burlington	5,100	-5.9%	(299)	4,801
Virginia	Alexandria	5,100	8.7%	443	5,543
Virginia	Lynchburg	5,100	-2.7%	(138)	4,962
Washington	Seattle	5,100	12.6%	644	5,744
Washington	Spokane	5,100	-2.7%	(136)	4,964
West Virginia	Charleston	5,100	-2.0%	(103)	4,997
Wisconsin	Green Bay	5,100	0.0%	0	5,100
Wyoming	Cheyenne	5,100	1.4%	74	5,174
Puerto Rico	Cayey	0	0	0	0

TABLE 4-4 – LOCATION-BASED COSTS FOR APC/CCS FACILITY (1,300,000 KW) (OCTOBER 1, 2010 DOLLARS)

State	City	Base Project Cost ($/kW)	Location Percent Variation	Delta Cost Difference ($/kW)	Total Location Project Cost ($/kW)
Alaska	Anchorage	4,580	35.2%	1,610	6,190
Alaska	Fairbanks	4,580	34.2%	1,565	6,145
Alabama	Huntsville	4,580	-8.3%	(380)	4,200
Arizona	Phoenix	4,580	-5.8%	(266)	4,314
Arkansas	Little Rock	4,580	-6.1%	(278)	4,302
California	Los Angeles	4,580	21.5%	985	5,565
California	Redding	4,580	10.4%	475	5,055
California	Bakersfield	4,580	9.9%	453	5,033
California	Sacramento	4,580	15.5%	710	5,290
California	San Francisco	4,580	45.2%	2,071	6,651
Colorado	Denver	4,580	-6.7%	(309)	4,271
Connecticut	Hartford	4,580	28.1%	1,288	5,868
Delaware	Dover	4,580	24.2%	1,109	5,689
District of Columbia	Washington	4,580	41.4%	1,895	6,475
Florida	Tallahassee	4,580	-12.1%	(552)	4,028
Florida	Tampa	4,580	-5.4%	(245)	4,335
Georgia	Atlanta	4,580	-9.0%	(413)	4,167
Hawaii	Honolulu	0	0	0	0
Idaho	Boise	4,580	-4.2%	(191)	4,389
Illinois	Chicago	4,580	21.7%	995	5,575
Indiana	Indianapolis	4,580	3.2%	148	4,728
Iowa	Davenport	4,580	-1.7%	(79)	4,501
Iowa	Waterloo	4,580	-10.0%	(457)	4,123
Kansas	Wichita	4,580	-7.5%	(343)	4,237
Kentucky	Louisville	4,580	-6.2%	(284)	4,296
Louisiana	New Orleans	4,580	-12.4%	(567)	4,013
Maine	Portland	4,580	-1.1%	(48)	4,532
Maryland	Baltimore	4,580	4.6%	211	4,791
Massachusetts	Boston	4,580	37.7%	1,728	6,308
Michigan	Detroit	4,580	4.2%	193	4,773
Michigan	Grand Rapids	4,580	-8.7%	(398)	4,182
Minnesota	St. Paul	4,580	4.3%	195	4,775
Mississippi	Jackson	4,580	-8.2%	(377)	4,203
Missouri	St. Louis	4,580	7.7%	354	4,934
Missouri	Kansas City	4,580	3.7%	168	4,748
Montana	Great Falls	4,580	-4.8%	(222)	4,358
Nebraska	Omaha	4,580	-3.9%	(180)	4,400
New Hampshire	Concord	4,580	-1.9%	(87)	4,493
New Jersey	Newark	4,580	17.1%	781	5,361

State	City	Base Project Cost ($/kW)	Location Percent Variation	Delta Cost Difference ($/kW)	Total Location Project Cost ($/kW)
New Mexico	Albuquerque	4,580	-4.4%	(202)	4,378
New York	New York	4,580	36.0%	1,650	6,230
New York	Syracuse	4,580	9.7%	442	5,022
Nevada	Las Vegas	4,580	7.9%	361	4,941
North Carolina	Charlotte	4,580	-10.7%	(492)	4,088
North Dakota	Bismarck	4,580	-8.8%	(404)	4,176
Ohio	Cincinnati	4,580	0.1%	4	4,584
Oregon	Portland	4,580	10.1%	461	5,041
Pennsylvania	Philadelphia	4,580	13.3%	609	5,189
Pennsylvania	Wilkes-Barre	4,580	-4.0%	(182)	4,398
Rhode Island	Providence	4,580	4.5%	205	4,785
South Carolina	Spartanburg	4,580	-13.1%	(600)	3,980
South Dakota	Rapid City	4,580	-11.8%	(542)	4,038
Tennessee	Knoxville	4,580	-9.9%	(455)	4,125
Texas	Houston	4,580	-10.5%	(482)	4,098
Utah	Salt Lake City	4,580	-3.6%	(167)	4,413
Vermont	Burlington	4,580	-6.0%	(273)	4,307
Virginia	Alexandria	4,580	9.9%	455	5,035
Virginia	Lynchburg	4,580	-2.4%	(112)	4,468
Washington	Seattle	4,580	13.7%	626	5,206
Washington	Spokane	4,580	-2.6%	(121)	4,459
West Virginia	Charleston	4,580	-2.0%	(93)	4,487
Wisconsin	Green Bay	4,580	0.3%	14	4,594
Wyoming	Cheyenne	4,580	2.2%	102	4,682
Puerto Rico	Cayey	0	0	0	0

4.5 O&M ESTIMATE

The O&M items for the APC/CCS Facility are the same as those discussed in Section 3.5 for the APC Facility (without CCS), except that adders are included to both FOM and VOM to accommodate the expenses associated with compressor maintenance, sequestration maintenance, and the associated additional labor required to manage, operate, and maintain the additional equipment. Table 4-5 and Table 4-6 present the FOM and VOM expenses for the APC/CCS Facility.

TABLE 4-5 – O&M EXPENSES FOR APC/CCS (650,000 KW)

Technology:	APC/CCS
Fixed O&M Expense	$76.62/kW-year
Variable O&M Expense	$9.05/MWh

TABLE 4-6 – O&M EXPENSES FOR APC/CCS (1,300,000 KW)

Technology:	APC/CCS
Fixed O&M Expense	$63.21/kW-year
Variable O&M Expense	$9.05/MWh

4.6 ENVIRONMENTAL COMPLIANCE INFORMATION

In addition to the equipment utilized for environmental compliance in the APC Facility, the APC/CCS Facility includes an amine scrubber that is intended to remove 90 percent of the CO_2 produced in the combustion process, wherein the captured CO_2 is later compressed to HP and sequestered, as discussed above. Table 4-7 presents the environmental emissions for the APC/CCS Facility.

TABLE 4-7 – ENVIRONMENTAL EMISSIONS FOR APC/CCS

Technology:	APC/CCS
NO_X	0.06 lb/MMBtu
SO_2	0.02 lb/MMBtu
CO_2	20.6 lb/MMBtu

5. CONVENTIONAL NATURAL GAS COMBINED CYCLE (NGCC)

5.1 MECHANICAL EQUIPMENT AND SYSTEMS

The Conventional NGCC produces 540 MW of net electricity. The facility utilizes two natural gas-fueled F-class CTs and associated electric generators, two supplemental-fired heat recovery steam generators ("HRSG"), and one condensing ST and associated electric generator operating in combined-cycle mode. Each CT is designed to produce nominally 172 MW and includes a dry-low NO_X ("DLN") combustion system and a hydrogen-cooled electric generator. The two triple-pressure HRSGs include integrated deaerators, SCRs, oxidation catalyst for the control of carbon monoxide ("CO"), and supplemental duct firing with associated combustion management. The ST is a single-reheat condensing ST designed for variable pressure operation, designed to produce an additional 210 MW. The ST exhaust is cooled in a closed-loop condenser system with a mechanical draft cooling tower. The CTs are equipped with inlet evaporative coolers to reduce the temperature of the turbine inlet air to increase summer output. The Conventional NGCC plant also includes a raw water treatment system consisting of clarifiers and filters and a turbine hall, in which the CTs, ST, and HRSGs are enclosed to avoid freezing during periods of cold ambient temperatures. Figure 5-1 presents the Conventional NGCC process flow diagram.

FIGURE 5-1 – CONVENTIONAL NGCC DESIGN CONFIGURATION

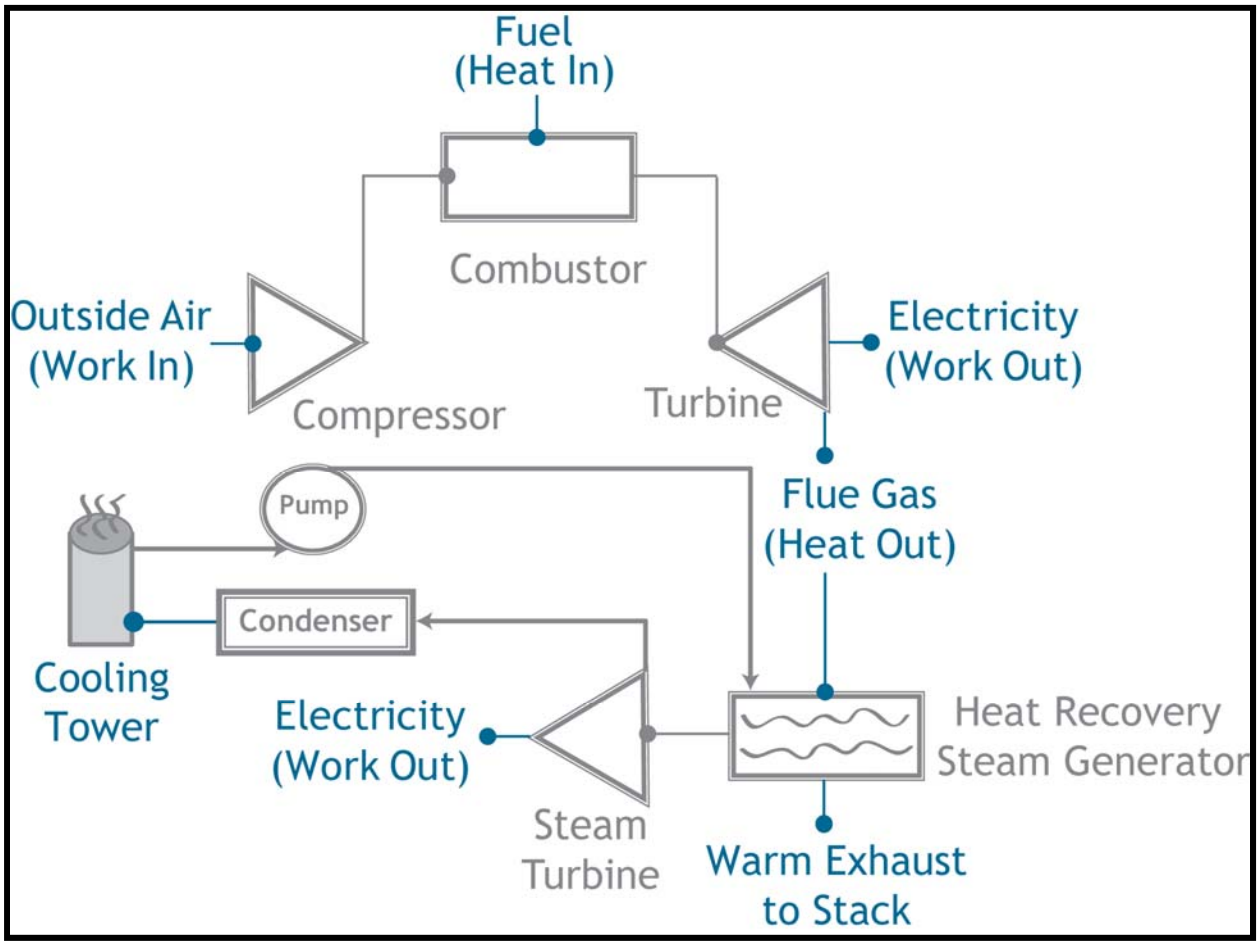

5.2 ELECTRICAL AND CONTROL SYSTEMS

The Conventional NGCC has two CT electric generators and one ST electric generator. The generators for the CTs are 60 Hz and rated at approximately 215 MVA with an output voltage of 18 kV. The ST electric generator is 60 Hz and rated at approximately 310 MVA with an output voltage of 18 kV. Each CT and ST electric generator is connected to a high-voltage bus in the Conventional NGCC via a dedicated generator circuit breaker, generator GSU, and a disconnect switch. The GSUs increase the voltage from the electric generators from 18 kV to interconnected high voltage.

The Conventional NGCC is controlled using a DCS. The DCS provides centralized control of the facility by integrating the control systems provided with each individual CT and associated electric generator, ST and associated electric generator, and the control of BOP systems and equipment.

5.3 OFF-SITE REQUIREMENTS

Natural gas is delivered to the facility through a lateral connected to the local natural gas trunk line. Water for all processes at the Conventional NGCC Facility is obtained from a one of several available water sources (e.g., municipal water supply). The Conventional NGCC Facility uses a water treatment system and a high-efficiency reverse osmosis system to reduce the

dissolved solids from the cooling water and to provide distilled water for HRSG makeup. Wastewater is sent to a municipal wastewater system. Further, the electrical interconnection from the Conventional NGCC on-site switchyard is effectuated by a connection to an adjacent utility substation.

5.4 CAPITAL COST ESTIMATE

The base Cost Estimate for the Conventional NGCC Facility with a nominal capacity of 540 MW is $980/kW. Table 5-1 summarizes the Cost Estimate categories for the Conventional NGCC Facility.

TABLE 5-1 – BASE PLANT SITE CAPITAL COST ESTIMATE FOR CONVENTIONAL NGCC

Technology:	**Conventional NGCC**	
Nominal Capacity (ISO):	**540,000 kW**	
Nominal Heat Rate (ISO):	**7,050 Btu/kWh-HHV**	
Capital Cost Category		**(000s) (October 1, 2010$)**
Civil Structural Material and Installation		**40,100**
Mechanical Equipment Supply and Installation		**221,500**
Electrical / I&C Supply and Installation		**35,000**
Project Indirects (1)		**88,400**
EPC Cost before Contingency and Fee		**385,000**
Fee and Contingency		**55,000**
Total Project EPC		**440,000**
Owner Costs (excluding project finance)		**88,000**
Total Project Cost (excluding finance)		**528,000**
Total Project EPC	**/ kW**	**815**
Owner Costs 20% (excluding project finance)	**/ kW**	**163**
Total Project Cost (excluding project finance)	**/ kW**	**978**

(1) Includes engineering, distributable costs, scaffolding, construction management, and start-up.

For this type of technology and power plant configuration, our regional adjustments took into consideration the following: outdoor installation considerations, air-cooled condensers

compared to cooling towers, seismic design differences, zero-water discharge issues, local technical enhancements (e.g., additional noise remediation that is generally required in urban siting), remote location issues, urban – high density population issues, labor wage and productivity differences, location adjustments, owner cost differences, and the increase in overheads associated with these 10 adjustments.

Outdoor installation locations are considered in geographic areas where enclosed structures for the boilers would not be required due to the low probability of freezing. The locations that were included in outdoor installation are Alabama, Arizona, Arkansas, Florida, Georgia, Hawaii, Louisiana, Mississippi, New Mexico, South Carolina, and Puerto Rico.

The potential locations relating to the use of air-cooled condensers in place of mechanical draft wet cooling towers were identified as Arizona, California, Connecticut, Delaware, District of Columbia, Maryland, Massachusetts, New Hampshire, New York, Oregon, Pennsylvania, Rhode Island, Virginia, and Puerto Rico. These locations are identified as those where conservation of water, notwithstanding supply, has been and/or is becoming a significant issue in plant permitting/siting.

Seismic design differences among the various locations were based on U.S. seismic map information that detailed the various seismic zones throughout the U.S. No cost increases were associated with seismic Zone 0 and cost step increases were considered for Zones 1, 2, 3 and 4.

The potential locations relating to the need of zero-water discharge were identified as Arizona, California, Colorado, Connecticut, Delaware, District of Columbia, Maryland, Massachusetts, New Hampshire, New York, Rhode Island, Virginia, and Puerto Rico. Similar to water usage discussed above in this section on Conventional NGCC, wastewater treatment and disposal is considered a critical permitting/siting issue in these areas.

The locations with local technical enhancements include California, Colorado, Connecticut, Delaware, District of Columbia, Louisiana, Maryland, Massachusetts, New Jersey, New York, Rhode Island, Vermont, and Virginia. These areas are places where noise, visual impacts, and other technical enhancements generally need to be made by a project developer or utility to comply with the applicable permitting/siting requirements.

Remote location issues are related to geographic areas that typically require installation of man camps, higher craft incentives, and higher per diems are generally required with respect to construction, due to the fact that such areas are long distances from urban areas, where labor is generally abundant. Remote location designations were also considered in locations where higher equipment freight costs are typically incurred, which for example are regions not near established rail or highway access. Remote locations related to the Conventional NGCC include Fairbanks, Alaska; Honolulu, Hawaii; Albuquerque, New Mexico; Cheyenne, Wyoming; and Cayey, Puerto Rico.

Labor wage and productivity differences were handled as discussed in Section 2.5.1., taking into consideration the amount of labor we estimated for the Conventional NGCC Facility.

Location adjustments were made to locations where higher cost of living levels are incurred and/or where population density generally correlates to higher construction costs for power and other infrastructure projects. These locations include Alaska, California, Connecticut, Delaware, District of Columbia, Hawaii, Illinois, Maine, Maryland, Massachusetts, Michigan, Minnesota, New York, Ohio, and Wisconsin.

Owner costs were reviewed based on the need for utility upgrades and/or infrastructure costs such as new facility transmission lines to tie to existing utility transmission substations or existing transmission lines.

Table 5-2 presents the Conventional NGCC capital cost variations for alternative U.S. plant locations, including the difference between the given location and the average location specified for the Cost Estimate.

TABLE 5-2 – LOCATION-BASED COSTS FOR CONVENTIONAL NGCC

(OCTOBER 1, 2010 DOLLARS)

State	City	Base Project Cost ($/kW)	Location Percent Variation	Delta Cost Difference ($/kW)	Total Location Project Cost ($/kW)
Alaska	Anchorage	980	33.3%	326	1,306
Alaska	Fairbanks	980	38.2%	374	1,354
Alabama	Huntsville	980	-8.6%	(84)	896
Arizona	Phoenix	980	2.6%	25	1,005
Arkansas	Little Rock	980	-7.5%	(73)	912
California	Los Angeles	980	29.0%	284	1,264
California	Redding	980	13.5%	132	1,112
California	Bakersfield	980	15.8%	154	1,134
California	Sacramento	980	20.5%	200	1,180
California	San Francisco	980	46.1%	452	1,432
Colorado	Denver	980	2.1%	21	1,001
Connecticut	Hartford	980	27.9%	274	1,254
Delaware	Dover	980	26.2%	256	1,236
District of Columbia	Washington	980	33.3%	326	1,306
Florida	Tallahassee	980	-11.6%	(113)	867
Florida	Tampa	980	-6.0%	(58)	922
Georgia	Atlanta	980	-6.6%	(64)	916
Hawaii	Honolulu	980	50.2%	492	1,472
Idaho	Boise	980	-3.9%	(38)	942
Illinois	Chicago	980	16.7%	163	1,143
Indiana	Indianapolis	980	0.9%	9	989
Iowa	Davenport	980	0.5%	5	985
Iowa	Waterloo	980	-6.4%	(63)	917
Kansas	Wichita	980	-5.0%	(49)	936
Kentucky	Louisville	980	-5.4%	(53)	927
Louisiana	New Orleans	980	-5.2%	(51)	929
Maine	Portland	980	-3.4%	(33)	952
Maryland	Baltimore	980	20.4%	200	1,180
Massachusetts	Boston	980	40.0%	392	1,372
Michigan	Detroit	980	5.3%	52	1,032
Michigan	Grand Rapids	980	-5.3%	(52)	928
Minnesota	St. Paul	980	4.5%	44	1,024
Mississippi	Jackson	980	-8.6%	(84)	896

State	City	Base Project Cost ($/kW)	Location Percent Variation	Delta Cost Difference ($/kW)	Total Location Project Cost ($/kW)
Missouri	St. Louis	980	5.6%	55	1,035
Missouri	Kansas City	980	2.7%	27	1,007
Montana	Great Falls	980	-2.4%	(24)	956
Nebraska	Omaha	980	-1.5%	(15)	965
New Hampshire	Concord	980	7.3%	72	1,052
New Jersey	Newark	980	22.1%	217	1,197
New Mexico	Albuquerque	980	-2.4%	(24)	956
New York	New York	980	68.4%	670	1,650
New York	Syracuse	980	16.3%	160	1,140
Nevada	Las Vegas	980	6.2%	61	1,041
North Carolina	Charlotte	980	-10.5%	(102)	888
North Dakota	Bismarck	980	-5.4%	(53)	927
Ohio	Cincinnati	980	-1.7%	(17)	963
Oregon	Portland	980	13.2%	130	1,110
Pennsylvania	Philadelphia	980	26.1%	255	1,235
Pennsylvania	Wilkes-Barre	980	-1.7%	(17)	963
Rhode Island	Providence	980	22.0%	215	1,195
South Carolina	Spartanburg	980	-12.8%	(126)	854
South Dakota	Rapid City	980	-8.0%	(78)	902
Tennessee	Knoxville	980	-8.5%	(84)	896
Texas	Houston	980	-8.8%	(87)	893
Utah	Salt Lake City	980	-4.0%	(39)	941
Vermont	Burlington	980	-0.1%	(1)	979
Virginia	Alexandria	980	16.0%	157	1,137
Virginia	Lynchburg	980	-5.8%	(57)	923
Washington	Seattle	980	7.0%	68	1,048
Washington	Spokane	980	-2.6%	(25)	955
West Virginia	Charleston	980	0.1%	1	981
Wisconsin	Green Bay	980	-1.3%	(13)	967
Wyoming	Cheyenne	980	-0.5%	(4)	976
Puerto Rico	Cayey	980	10.9%	106	1,086

5.5 O&M ESTIMATE

In addition to the general O&M items discussed in Section 2.5.2., the Conventional NGCC Facility includes the major maintenance for the CTs, as well as the BOP, including the ST, associated electric generators, HRSGs, and emissions reduction catalysts. These major maintenance expenses are included with the VOM expense for this technology and are given on an average basis across the MWhs incurred. Typically, significant overhauls on a Conventional NGCC Facility occur no less frequently than 24,000 operating hour intervals. Table 5-3 presents the O&M expenses for the Conventional NGCC Facility.

TABLE 5-3 – O&M EXPENSES FOR CONVENTIONAL NGCC

Technology:	Conventional NGCC
Fixed O&M Expense	$14.39/kW-year
Variable O&M Expense	$3.43/MWh

5.6 ENVIRONMENTAL COMPLIANCE INFORMATION

The Conventional NGCC utilizes DLN combustion systems in the primary combustion zone of the CT and best available burner technology with respect to the duct burners in the HRSGs to manage the production of NO_X and CO. Additional control of NO_X and CO is accomplished through an SCR and an oxidization catalyst, respectively. Oxides of sulfur in the Conventional NGCC are managed through the natural gas fuel quality, which is generally very low in sulfur U.S. domestic pipeline quality natural gas, and consequently the low sulfur content translates into SO_2 after combustion. The Conventional NGCC does not include any control devices for CO_2, which is proportional the heat rate (inversely proportional to the efficiency) of the technology. Water, wastewater, and solid waste compliance are achieved through traditional on-site and off-site methods, and the costs for such compliance are included in the O&M estimate for the Conventional NGCC Facility. Table 5-4 presents environmental emissions for the Conventional NGCC Facility.

TABLE 5-4 – ENVIRONMENTAL EMISSIONS FOR CONVENTIONAL NGCC

Technology:	Conventional NGCC
NO_X	0.0075 lb/MMBtu
SO_2	0.001 lb/MMBtu
CO_2	117 lb/MMBtu

6. ADVANCED GENERATION NATURAL GAS COMBINED CYCLE (AG-NGCC)

6.1 MECHANICAL EQUIPMENT AND SYSTEMS

The Advanced Generation ("AG")-NGCC design is the same as the Conventional NGCC, except an H-class CT is utilized in lieu of F-class, and there is only one CT/HRSG supporting the ST included. Since the H-class CT design employees steam cooling of both stationary and rotational hot parts, the HRSG systems and the ST are both considered "advanced" designs, as compared to the Conventional NGCC. The net output of the AG-NGCC is 400 MW. Figure 6-1 presents the AG-NGCC process flow diagram.

FIGURE 6-1 – AG-NGCC DESIGN CONFIGURATION

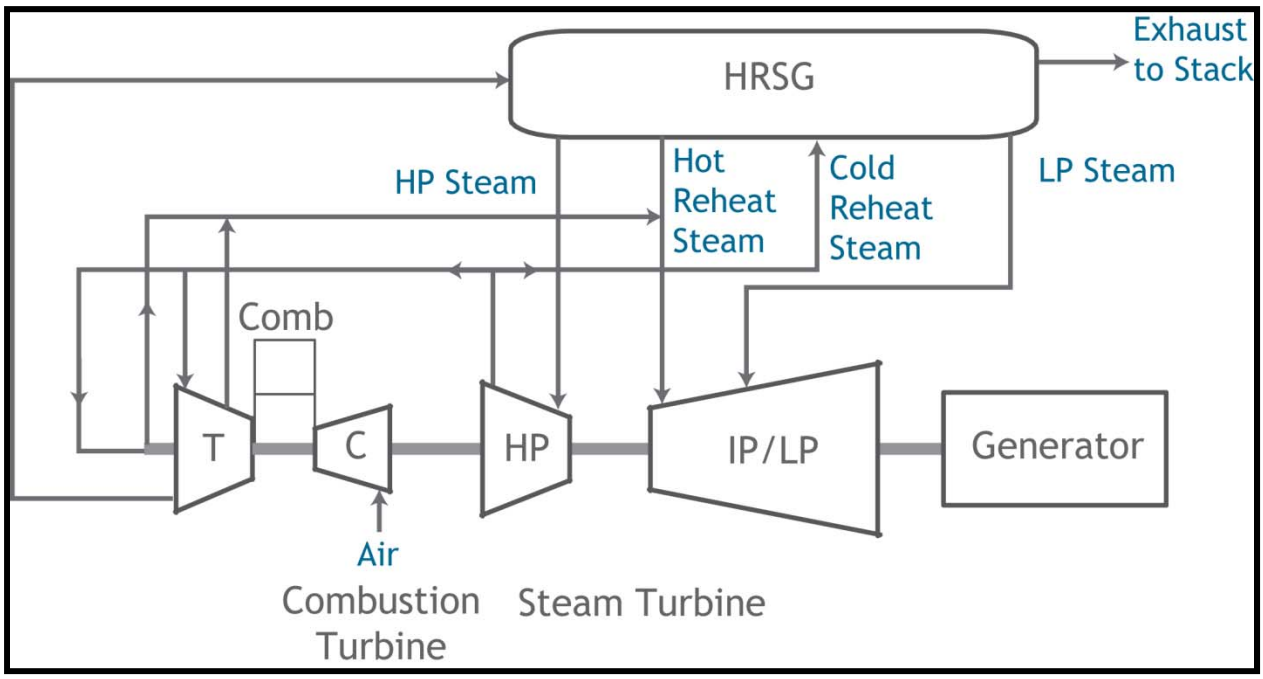

6.2 ELECTRICAL AND CONTROL SYSTEMS

The AG-NGCC electrical and control systems are similar to the Conventional NGCC Facility, except that the sizing of the generators and transformers are larger to support the larger CT and ST equipment utilized in the AG-NGCC.

6.3 OFF-SITE REQUIREMENTS

The off-site requirements for the AG-NGCC Facility are the same as the Conventional NGCC. Refer to Section 5.3 for the description of the Conventional NGCC off-site requirements.

6.4 CAPITAL COST ESTIMATE

The base Cost Estimate for the AG-NGCC Facility with a nominal capacity of 400 MW is $1,003/kW. Table 6-1 summarizes the Cost Estimate categories for the Conventional NGCC Facility.

TABLE 6-1 – BASE PLANT SITE CAPITAL COST ESTIMATE FOR AG-NGCC

Technology:	**AG-NGCC**	
Nominal Capacity (ISO):	**400,000 kW**	
Nominal Heat Rate (ISO):	**6,430 Btu/kWh-HHV**	
Capital Cost Category		**(000s) (October 1, 2010$)**
Civil Structural Material and Installation		**20,610**
Mechanical Equipment Supply and Installation		**178,650**
Electrical / I&C Supply and Installation		**24,800**
Project Indirects (1)		**68,300**
EPC Cost before Contingency and Fee		**292,360**
Fee and Contingency		**42,000**
Total Project EPC		**334,360**
Owner Costs (excluding project finance)		**66,872**
Total Project Cost (excluding finance)		**401,232**
Total Project EPC	**/ kW**	**836**
Owner Costs 20% (excluding project finance)	**/ kW**	**167**
Total Project Cost (excluding project finance)	**/ kW**	**1,003**

(1) Includes engineering, distributable costs, scaffolding, construction management, and start-up.

The locational adjustments for the AG-NGCC Facility similar to those made for the Conventional NGCC Facility.

Table 6-2 presents the AG-NGCC Facility capital cost variations for alternative U.S. plant locations, including the difference between the given location and the average location specified for the Cost Estimate.

TABLE 6-2 – LOCATION-BASED COSTS FOR AG-NGCC
(OCTOBER 1, 2010 DOLLARS)

State	City	Base Project Cost ($/kW)	Location Percent Variation	Delta Cost Difference ($/kW)	Total Location Project Cost ($/kW)
Alaska	Anchorage	1,005	32.4%	325	1,330
Alaska	Fairbanks	1,005	37.2%	374	1,379
Alabama	Huntsville	1,005	-8.3%	(84)	921
Arizona	Phoenix	1,005	2.6%	26	1,031
Arkansas	Little Rock	1,005	-6.7%	(67)	938
California	Los Angeles	1,005	28.2%	283	1,288
California	Redding	1,005	13.1%	132	1,137
California	Bakersfield	1,005	15.4%	154	1,159
California	Sacramento	1,005	19.9%	200	1,205
California	San Francisco	1,005	44.9%	451	1,456
Colorado	Denver	1,005	2.1%	21	1,026
Connecticut	Hartford	1,005	27.2%	273	1,278
Delaware	Dover	1,005	25.5%	256	1,261
District of Columbia	Washington	1,005	32.5%	326	1,331
Florida	Tallahassee	1,005	-11.2%	(113)	892
Florida	Tampa	1,005	-5.8%	(58)	947
Georgia	Atlanta	1,005	-6.3%	(64)	941
Hawaii	Honolulu	1,005	48.9%	492	1,497
Idaho	Boise	1,005	-3.7%	(38)	967
Illinois	Chicago	1,005	16.1%	162	1,167
Indiana	Indianapolis	1,005	0.9%	9	1,014
Iowa	Davenport	1,005	0.5%	5	1,010
Iowa	Waterloo	1,005	-6.2%	(62)	943
Kansas	Wichita	1,005	-4.3%	(43)	962
Kentucky	Louisville	1,005	-5.2%	(52)	953
Louisiana	New Orleans	1,005	-5.0%	(50)	955
Maine	Portland	1,005	-2.7%	(27)	978
Maryland	Baltimore	1,005	19.9%	200	1,205
Massachusetts	Boston	1,005	38.9%	391	1,396
Michigan	Detroit	1,005	5.2%	52	1,057
Michigan	Grand Rapids	1,005	-5.1%	(51)	954
Minnesota	St. Paul	1,005	4.4%	44	1,049
Mississippi	Jackson	1,005	-8.3%	(83)	922
Missouri	St. Louis	1,005	5.4%	54	1,059
Missouri	Kansas City	1,005	2.6%	26	1,031
Montana	Great Falls	1,005	-2.3%	(24)	981
Nebraska	Omaha	1,005	-1.4%	(14)	991
New Hampshire	Concord	1,005	7.2%	72	1,077
New Jersey	Newark	1,005	21.4%	215	1,220
New Mexico	Albuquerque	1,005	-2.3%	(23)	982

State	City	Base Project Cost ($/kW)	Location Percent Variation	Delta Cost Difference ($/kW)	Total Location Project Cost ($/kW)
New York	New York	1,005	66.4%	667	1,672
New York	Syracuse	1,005	15.9%	160	1,165
Nevada	Las Vegas	1,005	6.0%	61	1,066
North Carolina	Charlotte	1,005	-9.1%	(91)	914
North Dakota	Bismarck	1,005	-5.2%	(52)	953
Ohio	Cincinnati	1,005	-1.6%	(16)	989
Oregon	Portland	1,005	12.9%	130	1,135
Pennsylvania	Philadelphia	1,005	25.3%	254	1,259
Pennsylvania	Wilkes-Barre	1,005	-1.6%	(16)	989
Rhode Island	Providence	1,005	21.4%	215	1,220
South Carolina	Spartanburg	1,005	-12.4%	(125)	880
South Dakota	Rapid City	1,005	-7.7%	(77)	928
Tennessee	Knoxville	1,005	-8.2%	(83)	922
Texas	Houston	1,005	-8.5%	(86)	919
Utah	Salt Lake City	1,005	-3.8%	(38)	967
Vermont	Burlington	1,005	0.0%	(0)	1,005
Virginia	Alexandria	1,005	15.6%	157	1,162
Virginia	Lynchburg	1,005	-5.6%	(56)	949
Washington	Seattle	1,005	6.8%	68	1,073
Washington	Spokane	1,005	-2.5%	(25)	980
West Virginia	Charleston	1,005	0.1%	1	1,006
Wisconsin	Green Bay	1,005	-1.3%	(13)	992
Wyoming	Cheyenne	1,005	-0.4%	(4)	1,001
Puerto Rico	Cayey	1,005	10.6%	107	1,112

6.5 O&M ESTIMATE

The O&M items for the AG-NGCC Facility are the same as those described in Section 5.5 for the Conventional NGCC Facility. Table 6-3 presents the O&M expenses for the AG-NGCC Facility.

TABLE 6-3 – O&M EXPENSES FOR AG-NGCC

Technology:	AG-NGCC
Fixed O&M Expense	$14.62/kW-year
Variable O&M Expense	$3.11/MWh

6.6 ENVIRONMENTAL COMPLIANCE INFORMATION

The environmental compliance strategy and equipment for the AG-NGCC Facility is the same as those described in Section 5.6 for the Conventional NGCC Facility. Table 6-4 presents environmental emissions for the AG-NGCC Facility.

TABLE 6-4 – ENVIRONMENTAL EMISSIONS FOR AG-NGCC

Technology:	AG-NGCC
NO_X	0.0075 lb/MMBtu
SO_2	0.001 lb/MMBtu
CO_2	117 lb/MMBtu

7. ADVANCED GENERATION NATURAL GAS COMBINED CYCLE WITH CCS (AG-NGCC/CCS)

7.1 MECHANICAL EQUIPMENT AND SYSTEMS

The plant configuration for the AG-NGCC/CCS Facility is the same as the AG-NGCC Facility with the exception that an amine system based on MEA as the solvent is included for CO_2 capture from the flue gas. The captured CO_2 is compressed to approximately 2,000 psia for injection into a pipeline at the plant fence line. Figure 7-1 presents the AG-NGCC with CCS process flow diagram.

FIGURE 7-1 – AG-NGCC WITH CCS DESIGN CONFIGURATION

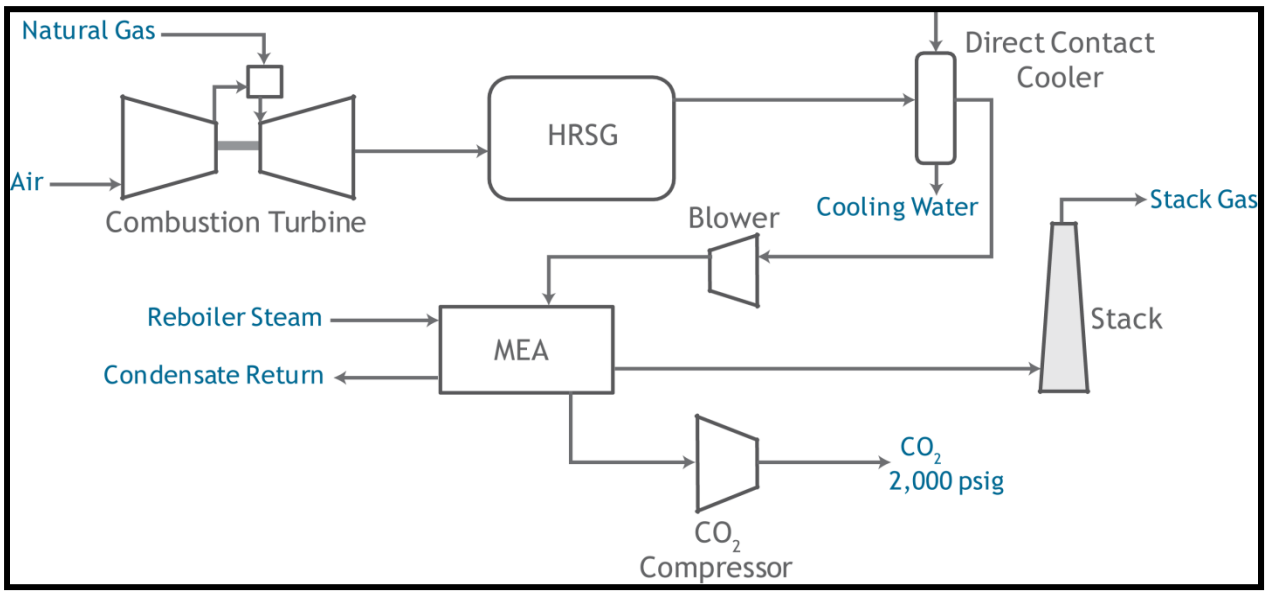

7.2 ELECTRICAL AND CONTROL SYSTEMS

The electrical and control systems for the AG-NGCC/CCS Facility are materially similar to the AG-NGCC Facility described in Section 6.2.

7.3 OFF-SITE REQUIREMENTS

The off-site requirements for the AG-NGCC/CCS Facility are materially similar to the AG-NGCC Facility, except that the CO_2 needs sequestering in one of the following geologic formations: (1) exhausted gas storage location, (2) unminable coal seam, (3) enhanced oil recovery, or (4) saline aquifer. To the extent that a sequestration site is not near the given facility being analyzed, transportation for a viable sequestration site has the potential to materially affect the capital cost estimates discussed below.

7.4 CAPITAL COST ESTIMATE

The base Cost Estimate for the AG-NGCC/CCS Facility with a nominal capacity of 340 MW is $2,060/kW. The capital cost estimate was based on the AG-NGCC (without CCS) and the base cost estimate was increased to include the expected costs of CCS. Table 7-1 summarizes the Cost Estimate categories for the AG-NGCC/CCS Facility.

TABLE 7-1 – BASE PLANT SITE CAPITAL COST ESTIMATE FOR AG-NGCC/CCS COST

Technology:	**AG-NGCC/CCS**	
Nominal Capacity (ISO):	**340,000 kW**	
Nominal Heat Rate (ISO):	**7,525 Btu/kWh-HHV**	
Total Project EPC		**583,667**
Owner Costs (excluding project finance)		**116,733**
Total Project Cost (excluding finance)		**700,400**
Total Project EPC	**/ kW**	**1,717**
Owner Costs 20% (excluding project finance)	**/ kW**	**343**
Total Project Cost (excluding project finance)	**/ kW**	**2,060**

(1) Includes engineering, distributable costs, scaffolding, construction management, and start-up.

The locational adjustments for the AG-NGCC/CCS Facility are similar to those made for the Conventional NGCC Facility, described in Section 5.4.

Table 7-2 presents the AG-NGCC/CCS Facility capital cost variations for alternative U.S. plant locations, including the difference between the given location and the average location specified for the Cost Estimate.

TABLE 7-2 – LOCATION-BASED COSTS FOR AG-NGCC/CCS (OCTOBER 1, 2010 DOLLARS)

State	City	Base Project Cost ($/kW)	Location Percent Variation	Delta Cost Difference ($/kW)	Total Location Project Cost ($/kW)
Alaska	Anchorage	2,060	20.8%	428	2,488
Alaska	Fairbanks	2,060	23.7%	488	2,548
Alabama	Huntsville	2,060	-8.5%	(174)	1,886
Arizona	Phoenix	2,060	-2.3%	(47)	2,013
Arkansas	Little Rock	2,060	-7.0%	(143)	1,917
California	Los Angeles	2,060	16.1%	331	2,391
California	Redding	2,060	7.4%	152	2,212
California	Bakersfield	2,060	8.2%	169	2,229
California	Sacramento	2,060	13.3%	274	2,334
California	San Francisco	2,060	29.8%	615	2,675
Colorado	Denver	2,060	-2.9%	(60)	2,000
Connecticut	Hartford	2,060	15.9%	328	2,388
Delaware	Dover	2,060	13.5%	278	2,338
District of Columbia	Washington	2,060	14.8%	305	2,365
Florida	Tallahassee	2,060	-11.4%	(234)	1,826
Florida	Tampa	2,060	-5.3%	(108)	1,952
Georgia	Atlanta	2,060	-7.9%	(162)	1,898
Hawaii	Honolulu	2,060	26.8%	551	2,611
Idaho	Boise	2,060	-4.9%	(100)	1,960
Illinois	Chicago	2,060	16.9%	348	2,408
Indiana	Indianapolis	2,060	-0.5%	(11)	2,049
Iowa	Davenport	2,060	-0.6%	(13)	2,047
Iowa	Waterloo	2,060	-8.2%	(168)	1,892
Kansas	Wichita	2,060	-6.4%	(132)	1,928
Kentucky	Louisville	2,060	-6.2%	(127)	1,933
Louisiana	New Orleans	2,060	-8.5%	(175)	1,885
Maine	Portland	2,060	-4.9%	(102)	1,958
Maryland	Baltimore	2,060	7.3%	150	2,210
Massachusetts	Boston	2,060	26.6%	547	2,607
Michigan	Detroit	2,060	4.3%	88	2,148
Michigan	Grand Rapids	2,060	-7.0%	(144)	1,916
Minnesota	St. Paul	2,060	3.7%	76	2,136
Mississippi	Jackson	2,060	-8.4%	(173)	1,887
Missouri	St. Louis	2,060	4.4%	91	2,151
Missouri	Kansas City	2,060	2.3%	47	2,107
Montana	Great Falls	2,060	-4.5%	(93)	1,967
Nebraska	Omaha	2,060	-3.2%	(65)	1,995
New Hampshire	Concord	2,060	1.6%	34	2,094
New Jersey	Newark	2,060	18.8%	388	2,448
New Mexico	Albuquerque	2,060	-4.2%	(86)	1,974

State	City	Base Project Cost ($/kW)	Location Percent Variation	Delta Cost Difference ($/kW)	Total Location Project Cost ($/kW)
New York	New York	2,060	50.1%	1,032	3,092
New York	Syracuse	2,060	6.4%	133	2,193
Nevada	Las Vegas	2,060	6.1%	126	2,186
North Carolina	Charlotte	2,060	-10.8%	(223)	1,837
North Dakota	Bismarck	2,060	-7.1%	(146)	1,914
Ohio	Cincinnati	2,060	-3.4%	(70)	1,990
Oregon	Portland	2,060	7.1%	146	2,206
Pennsylvania	Philadelphia	2,060	18.3%	378	2,438
Pennsylvania	Wilkes-Barre	2,060	-3.7%	(77)	1,983
Rhode Island	Providence	2,060	11.9%	244	2,304
South Carolina	Spartanburg	2,060	-13.4%	(275)	1,785
South Dakota	Rapid City	2,060	-9.8%	(203)	1,857
Tennessee	Knoxville	2,060	-9.6%	(197)	1,863
Texas	Houston	2,060	-9.6%	(198)	1,862
Utah	Salt Lake City	2,060	-5.9%	(123)	1,937
Vermont	Burlington	2,060	-4.0%	(81)	1,979
Virginia	Alexandria	2,060	5.7%	118	2,178
Virginia	Lynchburg	2,060	-6.6%	(137)	1,923
Washington	Seattle	2,060	6.0%	123	2,183
Washington	Spokane	2,060	-3.5%	(71)	1,989
West Virginia	Charleston	2,060	-1.4%	(30)	2,030
Wisconsin	Green Bay	2,060	-2.7%	(55)	2,005
Wyoming	Cheyenne	2,060	-4.5%	(92)	1,968
Puerto Rico	Cayey	2,060	1.7%	34	2,094

7.5 O&M ESTIMATE

The O&M items for the AG-NGCC/CCS Facility are the same as those set forth in Section 6.5 for the AG-NGCC Facility, except that adders are included to both FOM and VOM to accommodate the expenses associated with compressor maintenance, sequestration maintenance, and the associated additional labor required to manage, operate, and maintain the additional equipment. Table 7-3 presents the O&M expenses for the AG-NGCC/CCS Facility.

TABLE 7-3 – O&M EXPENSES FOR AG-NGCC WITH CCS

Technology:	AG-NGCC/CCS
Fixed O&M Expense	$30.25/kW-year
Variable O&M Expense	$6.45/MWh

7.6 ENVIRONMENTAL COMPLIANCE INFORMATION

The environmental compliance strategy and equipment for the AG-NGCC Facility are the same as those described in Section 5.6 for the Conventional NGCC Facility, with the exception that the AG-NGCC with CCS Facility includes an amine scrubber control device for CO_2. Table 7-4 presents environmental emissions for the AG-NGCC/CCS Facility.

TABLE 7-4 – ENVIRONMENTAL EMISSIONS FOR AG-NGCC/CCS

Technology:	AG-NGCC/CCS
NO_X	0.0075 lb/MMBtu
SO_2	0.001 lb/MMBtu
CO_2	12 lb/MMBtu

8. CONVENTIONAL COMBUSTION TURBINE (CT)

8.1 MECHANICAL EQUIPMENT AND SYSTEMS

The Conventional CT Facility produces 85 MW of electricity using a single natural gas-fueled E-class CT and associated electric generator in simple-cycle mode. The CT is equipped with an inlet evaporative cooler to reduce the temperature of the turbine inlet air to increase summer output. Figure 8-1 presents the Conventional CT Facility process flow diagram.

FIGURE 8-1 – CONVENTIONAL CT DESIGN CONFIGURATION

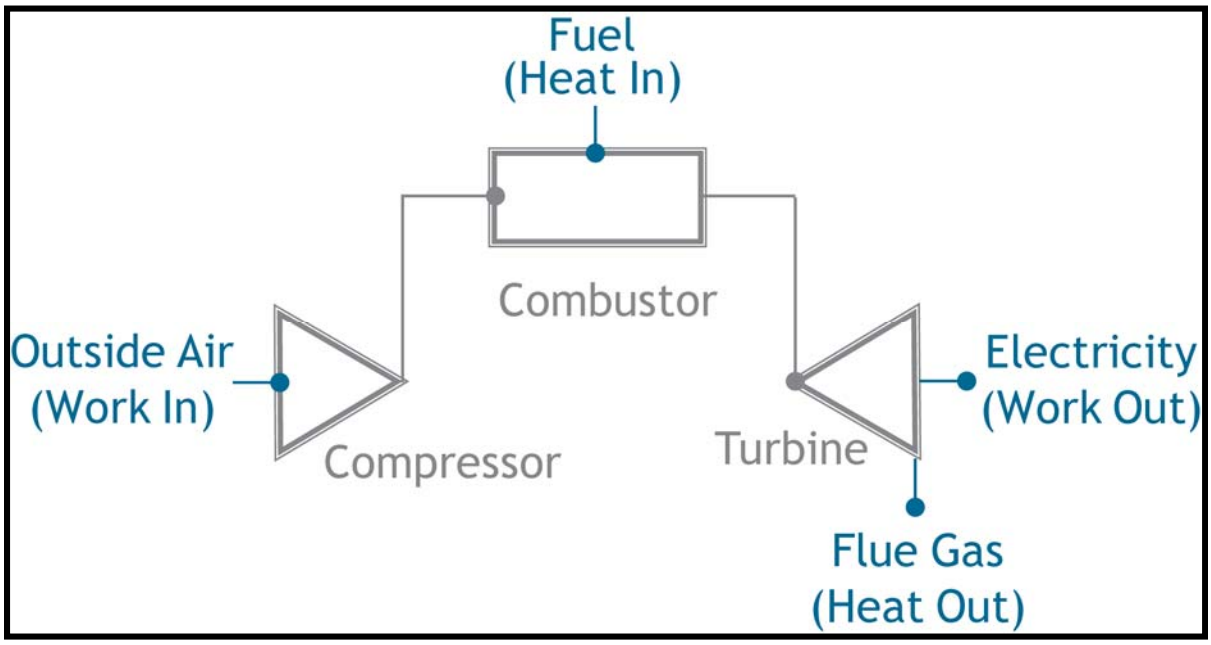

8.2 ELECTRICAL AND CONTROL SYSTEMS

The Conventional CT Facility has one CT electric generator. The generator is a 60 Hz machine rated at approximately 101 MVA with an output voltage of 13.8 kV. The CT electric generator is connected to a high-voltage bus in the Conventional CT Facility switchyard via a dedicated generator circuit breaker, GSU, and a disconnect switch. The GSU increases the voltage from the electric generator from 13.8 kV to interconnected transmission system high voltage.

The Conventional CT Facility is controlled using a DCS. The DCS provides centralized control of the facility by integrating the control systems provided with the individual CT and associated electric generator and the control of BOP systems and equipment.

8.3 OFF-SITE REQUIREMENTS

Natural gas is delivered to the facility through an approximately lateral connected to the local natural gas trunk line. Water for the limited processes that utilize water at the Conventional CT Facility is obtained from a one of several available water sources (e.g., municipal water supply). The Conventional CT Facility uses a water treatment system and a high-efficiency reverse osmosis system to reduce the dissolved solids for compressor cleaning. Wastewater is sent to a municipal wastewater system. Further, the electrical interconnection from the Conventional CT on-site switchyard is effectuated by a connection to an adjacent utility substation.

8.4 CAPITAL COST ESTIMATE

The base Cost Estimate for the Conventional CT Facility with a nominal capacity of 85 MW is $975/kW. Table 8-1 summarizes the Cost Estimate categories for the Conventional CT Facility.

TABLE 8-1 – BASE PLANT SITE
CAPITAL COST ESTIMATE FOR CONVENTIONAL CT

Technology:	**Conventional CT**	
Nominal Capacity (ISO):	**85,000 kW**	
Nominal Heat Rate (ISO):	**10,850 Btu/kWh-HHV**	
Capital Cost Category		**(000s) (October 1, 2010$)**
Civil Structural Material and Installation		**5,570**
Mechanical Equipment Supply and Installation		**34,709**
Electrical / I&C Supply and Installation		**10,700**
Project Indirects (1)		**12,248**
EPC Cost before Contingency and Fee		**63,227**
Fee and Contingency		**5,757**
Total Project EPC		**68,994**
Owner Costs (excluding project finance)		**13,799**
Total Project Cost (excluding finance)		**82,793**
Total Project EPC	**/ kW**	**812**
Owner Costs 20% (excluding project finance)	**/ kW**	**162**
Total Project Cost (excluding project finance)	**/ kW**	**974**

(1) Includes engineering, distributable costs, scaffolding, construction management, and start-up.

For this type of technology and power plant configuration, our regional adjustments took into consideration the following: outdoor installation considerations, seismic design differences, local technical enhancements (e.g., additional noise remediation that is generally required in urban siting), remote location issues, urban – high density population issues, labor wage and productivity differences, location adjustments, owner cost differences, and the increase in overheads associated with these previous eight location adjustments.

Outdoor installation locations are considered in geographic areas where enclosed structures for the boilers would not be required due to the low probability of freezing. The locations that were

included in outdoor installation are Alabama, Arizona, Arkansas, Florida, Georgia, Hawaii, Louisiana, Mississippi, New Mexico, South Carolina, and Puerto Rico.

Seismic design differences among the various locations were based on U.S. seismic map information that detailed the various seismic zones throughout the U.S. No cost increases were associated with seismic Zone 0 and cost step increases were considered for Zones 1, 2, 3 and 4.

The locations with local technical enhancements include California, Colorado, Connecticut, Delaware, District of Columbia, Louisiana, Maryland, Massachusetts, New Jersey, New York, Rhode Island, Vermont, and Virginia. These are areas where noise, visual impacts, and other technical enhancements generally need to be made by a project developer or utility to comply with the applicable permitting/siting requirements.

Remote location issues are related to geographic areas that typically require installation of man camps, higher craft incentives, and higher per diems are generally required with respect to construction, due to the fact that such areas are long distances from urban areas, where labor is generally abundant. Remote location designations were also considered in locations where higher equipment freight costs are typically incurred, which for example are regions not near established rail or highway access. Remote locations related to the Conventional CT Facility include Fairbanks, Alaska; Honolulu, Hawaii; Albuquerque, New Mexico; Cheyenne, Wyoming; and Cayey, Puerto Rico.

Labor wage and productivity differences were handled as discussed in Section 2.5.1, taking into consideration the amount of labor we estimated for the Conventional CT Facility.

Location adjustments were made to locations where higher cost of living levels are incurred and/or where population density generally correlates to higher construction costs for power and other infrastructure projects. These locations include Alaska, California, Connecticut, Delaware, District of Columbia, Hawaii, Illinois, Maine, Maryland, Massachusetts, Michigan, Minnesota, New York, Ohio, and Wisconsin.

Owner costs were reviewed based on the need for utility upgrades and/or infrastructure costs such as new facility transmission lines to tie to existing utility transmission substations or existing transmission lines.

Table 8-2 presents the Conventional CT Facility capital cost variations for alternative U.S. plant locations.

TABLE 8-2 – LOCATION-BASED COSTS FOR CONVENTIONAL CT (OCTOBER 1, 2010 DOLLARS)

State	City	Base Project Cost ($/kW)	Location Percent Variation	Delta Cost Difference ($/kW)	Total Location Project Cost ($/kW)
Alaska	Anchorage	975	31.7%	309	1,284
Alaska	Fairbanks	975	36.5%	355	1,330
Alabama	Huntsville	975	-5.1%	(50)	925
Arizona	Phoenix	975	-3.5%	(34)	941
Arkansas	Little Rock	975	-3.7%	(36)	939
California	Los Angeles	975	19.0%	185	1,160
California	Redding	975	3.9%	38	1,013
California	Bakersfield	975	6.3%	61	1,036
California	Sacramento	975	10.0%	97	1,072
California	San Francisco	975	34.2%	334	1,309
Colorado	Denver	975	-0.5%	(5)	970
Connecticut	Hartford	975	17.8%	174	1,149
Delaware	Dover	975	16.6%	162	1,137
District of Columbia	Washington	975	24.5%	239	1,214
Florida	Tallahassee	975	-7.6%	(74)	901
Florida	Tampa	975	-3.1%	(31)	944
Georgia	Atlanta	975	-2.9%	(29)	946
Hawaii	Honolulu	975	51.5%	502	1,477
Idaho	Boise	975	-2.8%	(28)	947
Illinois	Chicago	975	13.6%	132	1,107
Indiana	Indianapolis	975	1.3%	13	988
Iowa	Davenport	975	0.9%	8	983
Iowa	Waterloo	975	-4.6%	(45)	930
Kansas	Wichita	975	-3.0%	(29)	946
Kentucky	Louisville	975	-4.1%	(40)	935
Louisiana	New Orleans	975	-1.1%	(11)	964
Maine	Portland	975	-1.6%	(15)	960
Maryland	Baltimore	975	12.0%	117	1,092
Massachusetts	Boston	975	28.2%	275	1,250
Michigan	Detroit	975	4.8%	46	1,021
Michigan	Grand Rapids	975	-3.8%	(37)	938
Minnesota	St. Paul	975	4.0%	39	1,014
Mississippi	Jackson	975	-5.1%	(49)	926
Missouri	St. Louis	975	5.0%	48	1,023
Missouri	Kansas City	975	2.4%	23	998
Montana	Great Falls	975	-1.3%	(12)	963
Nebraska	Omaha	975	-0.6%	(6)	969
New Hampshire	Concord	975	-1.3%	(13)	962
New Jersey	Newark	975	19.3%	188	1,163

State	City	Base Project Cost ($/kW)	Location Percent Variation	Delta Cost Difference ($/kW)	Total Location Project Cost ($/kW)
New Mexico	Albuquerque	975	0.6%	6	981
New York	New York	975	53.2%	518	1,493
New York	Syracuse	975	7.5%	73	1,048
Nevada	Las Vegas	975	5.2%	50	1,025
North Carolina	Charlotte	975	-7.2%	(70)	905
North Dakota	Bismarck	975	-3.8%	(38)	937
Ohio	Cincinnati	975	-0.8%	(8)	967
Oregon	Portland	975	3.7%	36	1,011
Pennsylvania	Philadelphia	975	14.8%	144	1,119
Pennsylvania	Wilkes-Barre	975	-0.7%	(7)	968
Rhode Island	Providence	975	12.2%	119	1,094
South Carolina	Spartanburg	975	-8.3%	(81)	894
South Dakota	Rapid City	975	-5.8%	(57)	918
Tennessee	Knoxville	975	-6.6%	(65)	910
Texas	Houston	975	-7.0%	(68)	907
Utah	Salt Lake City	975	-2.6%	(25)	950
Vermont	Burlington	975	1.3%	13	988
Virginia	Alexandria	975	7.4%	72	1,047
Virginia	Lynchburg	975	-4.5%	(44)	931
Washington	Seattle	975	6.1%	59	1,034
Washington	Spokane	975	-1.8%	(18)	957
West Virginia	Charleston	975	0.6%	6	981
Wisconsin	Green Bay	975	-0.6%	(6)	969
Wyoming	Cheyenne	975	1.0%	10	985
Puerto Rico	Cayey	975	4.8%	47	1,022

8.5 O&M ESTIMATE

In addition to the general O&M items discussed in Section 2.5.2, the Conventional CT Facility includes the major maintenance for the CT and associated electric generator. These major maintenance expenses are included with the VOM expense for this technology, based upon an assumed 10 percent annual capacity factor and an operating profile of approximately 8 hours of operation per CT start. Typically, significant overhauls on a Conventional CT Facility occur no less frequently than 8,000 operating hour intervals; with more significant major maintenance outages occurring at 24,000 operating hour intervals; however, often times the major maintenance for a CT at a peaking facility is driven off of CT hours (depending on the equipment manufacturer and the operating hours per start incurred on the equipment). Table 8-3 presents the O&M expenses for the Conventional CT Facility.

TABLE 8-3 – O&M EXPENSES FOR CONVENTIONAL CT

Technology:	Conventional CT
Fixed O&M Expense	$6.98/kW-year
Variable O&M Expense	$14.70/MWh

8.6 ENVIRONMENTAL COMPLIANCE INFORMATION

Typically, a Conventional CT Facility would be equipped with only the DLN combustion hardware to mitigate emissions. There are some states in the U.S. that do require a "hot" SCR that can operate at the higher exhaust temperatures of a simple-cycle plant, though that equipment was not contemplated herein.

TABLE 8-4 – ENVIRONMENTAL EMISSIONS FOR CONVENTIONAL CT

Technology:	Conventional CT
NO_X	0.03 lb/MMBtu
SO_2	0.001 lb/MMBtu
CO_2	117 lb/MMBtu

9. ADVANCED COMBUSTION TURBINE (ACT)

9.1 MECHANICAL EQUIPMENT AND SYSTEMS

The Advanced CT Facility produces 210 MW of electricity using a single natural gas-fueled, state of the art (as of 2010) F-class CT and associated electric generator. The CT is equipped with an inlet evaporative cooler to reduce the temperature of the turbine inlet air to increase summer output. Figure 9-1 presents the Advanced CT process flow diagram.

FIGURE 9-1 – ADVANCED CT DESIGN CONFIGURATION

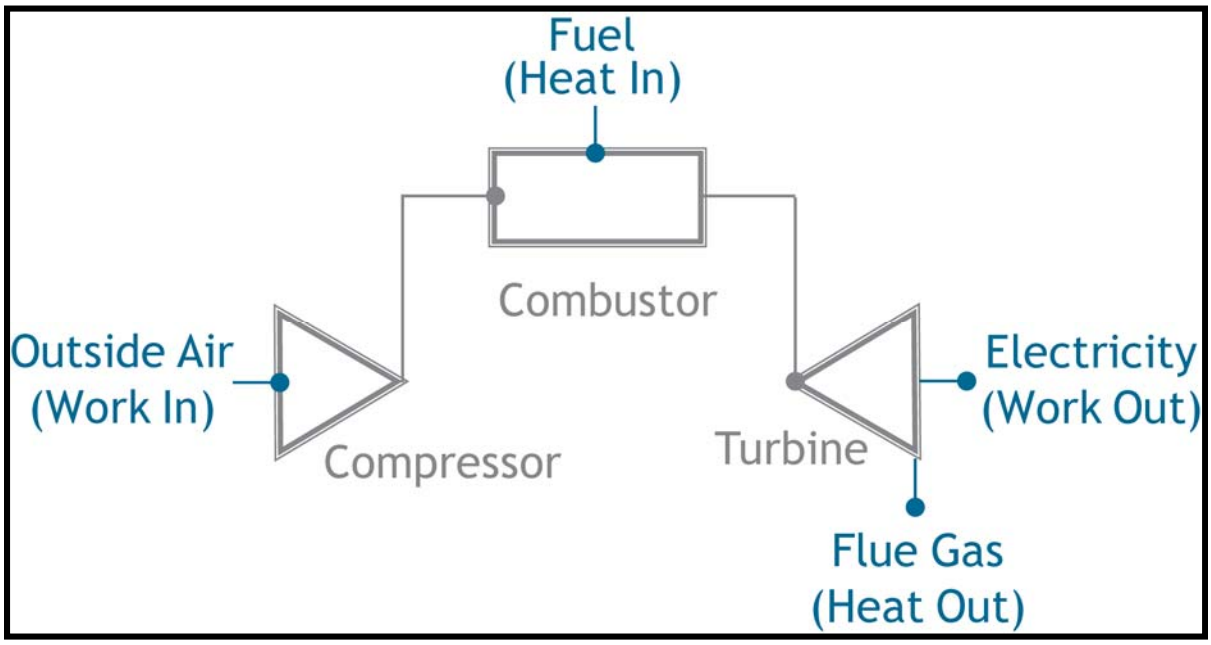

9.2 ELECTRICAL AND CONTROL SYSTEMS

The Advanced CT Facility has the same general electrical and control systems as the Conventional CT Facility, except that the electric generator is rated at approximately 234 MVA and the corresponding GSU is larger in the Advanced CT Facility.

9.3 OFF-SITE REQUIREMENTS

The off-site requirements for the Advanced CT Facility are materially similar to the Conventional CT Facility.

9.4 CAPITAL COST ESTIMATE

The base Cost Estimate for the Advanced CT Facility with a nominal capacity of 210 MW is $665/kW. Table 9-1 summarizes the Cost Estimate categories for the Advanced CT Facility.

TABLE 9-1 – BASE PLANT SITE CAPITAL COST ESTIMATE FOR ADVANCED CT

Technology:	**Advanced CT**	
Nominal Capacity (ISO):	**210,000 kW**	
Nominal Heat Rate (ISO):	**9,750 Btu/kWh-HHV**	
Capital Cost Category		**(000s) (October 1, 2010$)**
Civil Structural Material and Installation		**11,800**
Mechanical Equipment Supply and Installation		**58,700**
Electrical / I&C Supply and Installation		**15,300**
Project Indirects (1)		**16,460**
EPC Cost before Contingency and Fee		**102,260**
Fee and Contingency		**14,196**
Total Project EPC		**116,456**
Owner Costs (excluding project finance)		**23,291**
Total Project Cost (excluding finance)		**139,747**
Total Project EPC	**/ kW**	**554**
Owner Costs 20% (excluding project finance)	**/ kW**	**111**
Total Project Cost (excluding project finance)	**/ kW**	**665**

(1) Includes engineering, distributable costs, scaffolding, construction management, and start-up.

The locational considerations for the Advanced CT Facility are the same as those set forth in the section on the Conventional CT Facility.

Table 9-2 presents the Advanced CT Facility capital cost variations for alternative U.S. plant locations.

TABLE 9-2 – LOCATION-BASED COSTS FOR ADVANCED CT (OCTOBER 1, 2010 DOLLARS)

State	City	Base Project Cost ($/kW)	Location Percent Variation	Delta Cost Difference ($/kW)	Total Location Project Cost ($/kW)
Alaska	Anchorage	665	41.9%	279	944
Alaska	Fairbanks	665	48.4%	322	987
Alabama	Huntsville	665	-3.5%	(23)	642
Arizona	Phoenix	665	-1.9%	(12)	653
Arkansas	Little Rock	665	-2.0%	(13)	652
California	Los Angeles	665	25.7%	171	836
California	Redding	665	4.8%	32	697
California	Bakersfield	665	8.5%	57	722
California	Sacramento	665	11.3%	75	740
California	San Francisco	665	42.9%	285	950
Colorado	Denver	665	2.9%	19	684
Connecticut	Hartford	665	23.7%	157	822
Delaware	Dover	665	23.3%	155	820
District of Columbia	Washington	665	36.9%	245	910
Florida	Tallahassee	665	-5.7%	(38)	627
Florida	Tampa	665	-2.4%	(16)	649
Georgia	Atlanta	665	0.1%	1	666
Hawaii	Honolulu	665	72.8%	484	1,149
Idaho	Boise	665	-1.4%	(9)	656
Illinois	Chicago	665	11.6%	77	742
Indiana	Indianapolis	665	2.8%	18	683
Iowa	Davenport	665	2.1%	14	679
Iowa	Waterloo	665	-2.0%	(14)	651
Kansas	Wichita	665	-0.5%	(3)	662
Kentucky	Louisville	665	-2.7%	(18)	647
Louisiana	New Orleans	665	3.9%	26	691
Maine	Portland	665	1.0%	7	672
Maryland	Baltimore	665	19.9%	132	797
Massachusetts	Boston	665	34.3%	228	893
Michigan	Detroit	665	5.4%	36	701
Michigan	Grand Rapids	665	-1.4%	(9)	656
Minnesota	St. Paul	665	4.4%	29	694
Mississippi	Jackson	665	-3.4%	(23)	642
Missouri	St. Louis	665	5.6%	38	703
Missouri	Kansas City	665	2.5%	17	682
Montana	Great Falls	665	1.2%	8	673
Nebraska	Omaha	665	1.3%	9	674
New Hampshire	Concord	665	-0.2%	(2)	663
New Jersey	Newark	665	20.6%	137	802

State	City	Base Project Cost ($/kW)	Location Percent Variation	Delta Cost Difference ($/kW)	Total Location Project Cost ($/kW)
New Mexico	Albuquerque	665	3.7%	25	690
New York	New York	665	61.7%	410	1,075
New York	Syracuse	665	12.2%	81	746
Nevada	Las Vegas	665	4.6%	31	696
North Carolina	Charlotte	665	-4.6%	(31)	634
North Dakota	Bismarck	665	-1.5%	(10)	655
Ohio	Cincinnati	665	1.2%	8	673
Oregon	Portland	665	4.7%	31	696
Pennsylvania	Philadelphia	665	16.1%	107	772
Pennsylvania	Wilkes-Barre	665	1.7%	11	676
Rhode Island	Providence	665	16.6%	111	776
South Carolina	Spartanburg	665	-5.5%	(37)	628
South Dakota	Rapid City	665	-3.0%	(20)	645
Tennessee	Knoxville	665	-4.6%	(31)	634
Texas	Houston	665	-5.2%	(35)	630
Utah	Salt Lake City	665	0.0%	(0)	665
Vermont	Burlington	665	5.6%	37	702
Virginia	Alexandria	665	12.6%	84	749
Virginia	Lynchburg	665	-3.0%	(20)	645
Washington	Seattle	665	6.5%	43	708
Washington	Spokane	665	-0.6%	(4)	661
West Virginia	Charleston	665	2.3%	15	680
Wisconsin	Green Bay	665	1.0%	6	671
Wyoming	Cheyenne	665	5.5%	36	701
Puerto Rico	Cayey	665	10.3%	68	733

9.5 O&M ESTIMATE

The O&M items for the Advanced CT Facility are the same as those set forth in Section 8.5 for the Conventional CT Facility. Table 9-3 presents the O&M expenses for the Advanced CT Facility.

TABLE 9-3 – O&M EXPENSES FOR ADVANCED CT

Technology:	Advanced CT
Fixed O&M Expense	$6.70/kW-year
Variable O&M Expense	$9.87/MWh

9.6 ENVIRONMENTAL COMPLIANCE INFORMATION

The environmental compliance strategy and equipment for the Advanced CT Facility are the same as those used for the Conventional CT Facility (see Section 8.6). Table 9-4 presents environmental emissions for the Advanced CT Facility.

TABLE 9-4 – ENVIRONMENTAL EMISSIONS FOR ADVANCED CT

Technology:	Advanced CT
NO_X	0.03 lb/MMBtu
SO_2	0.001 lb/MMBtu
CO_2	117 lb/MMBtu

10. INTEGRATED GASIFICATION COMBINED CYCLE (IGCC)

10.1 MECHANICAL EQUIPMENT AND SYSTEMS

The following describes the IGCC Facility, which is a nominal 600 MW net coal-fired gasification-to-power facility. An analysis is also provided for a nominally 1,200 MW coal-fired gasification-to-power facility, which is essentially a dual-unit configuration, based on doubling the single-unit description provided below; however, a detailed technical description (due to the similarities/duplication with the single unit) is not provided herein. The feed for the gasification system is a slurry of water and ground coal and/or petroleum coke. The raw feedstock is ground in rod mills along with recycled water and slag fines to form the slurry. A fluxing agent is also added, if necessary, depending on the properties of the feedstock, to facilitate slagging at appropriate temperatures in the gasifier.

Air separation units ("ASU") provide a 95 percent-pure oxygen ("O_2") stream for gasification, and nitrogen for use as a diluent in the CTs, and for purging the gasifiers.

The IGCC Facility is based on two trains of ConocoPhillips (E-Gas®) gasifier, which is a two-stage, refractory lined vessel that converts the slurry feed into syngas consisting of hydrogen, CO, CO_2, methane, nitrogen, argon and water along with sulfur compounds in the form of hydrogen sulfide ("H_2S") and carbonyl sulfide ("COS") and a small amount of NH_3. The first stage is the slagging section in which the feedstock is partially combusted with O_2 at elevated temperature and pressure (2,500 degrees ºF and 540 psia). O_2 and preheated slurry are fed to each of two opposing mixing nozzles at opposite ends of the horizontal section. The gasification temperature is maintained above the ash fusion point to allow for slag formation and carbon conversion.

The raw syngas from the first stage flows into the vertical second stage where additional feed slurry is introduced to take advantage of the sensible heat in the gas. This fuel undergoes devolatization and pyrolysis generating additional syngas. The endothermic nature of the reactions and the introduction of a quench fluid reduce the temperature of the gas exiting to the gasifier to approximately 1,900ºF. At these temperatures (2,500ºF to 1,900ºF), two additional reactions occur, which change the character of the syngas as follows: (1) carbon-steam to produce CO; and (2) water gas shift (steam and CO) to produce hydrogen and CO_2. In addition, the lower reaction temperature in the second stage allows the formation of methane. Unreacted char is carried overhead and exits the reactor with the syngas. This char is recycled to the first stage of gasification.

The mineral matter in the feedstock and any fluxing agent form a molten slag that flows out of the horizontal section into water quench bath. The cooled slag exits the bottom of the quench, is crushed and exits the unit through a continuous slag removal system as a slurry.

The hot raw syngas is cooled in a vertical fire tube boiler from 1,900ºF to 700ºF. The hot gas is on the tube side with pressurized water on the shell side. This unit generates HP saturated steam. The saturated steam is sent to the HRSGs in the power block.

After cooling, the syngas is cleaned of entrained particles in a filter vessel containing numerous candlestick-type filter elements. The particles collect on the filter elements producing an essentially particulate matter free syngas that proceeds through the system.

Captured particulate matter is cleaned from the filter elements using cleaned syngas (in a back-pulse mode) and the carbon-rich material is pneumatically conveyed back to the first stage of the gasifier for conversion.

Following particulate matter removal, the syngas is scrubbed with water to remove chlorine and trace metals. The scrubbing medium is condensed sour water from the low-temperature heat recovery system.

After the chlorine scrubber, the raw syngas is treated in COS hydrolysis units, which convert the COS in the syngas to H_2S. The syngas is then cooled to approximately 100°F in a series of shell and tube heat exchangers in a step known as low-temperature heat recovery. This cooling removes most of the water in the syngas. In addition, most of the NH_3 and a small portion of CO_2 and H_2S are absorbed in the water. A portion of the condensed water is used in the chlorine scrubber with the remainder sent to sour water treatment. The low temperature heat removed prior to acid gas removal ("AGR") is used within the process.

After low-temperature heat recovery, the H_2S is then removed in the AGR units. The AGR units use the Selexol solvent in a single absorption stage to remove much of the sulfur from the syngas. The syngas passes through a mercury removal system consisting of sulfated activated carbon beds. Finally, the treated syngas is moisturized and sent to the power block.

The acid gas streams containing H_2S and COS with some CO_2 from AGR and sour water treatment are fed to the sulfur recovery units ("SRUs"). The SRUs are based on a standard Claus process to convert the acid gas to pure molten sulfur. The tail gas from the SRUs, composed of CO_2, nitrogen, and small amounts of sulfur, is catalytically hydrogenated to convert all of the sulfur to H_2S. This converted tail gas is compressed and recycled to the gasifiers.

Process water blowdown and water condensed during cooling of the sour syngas contains small amounts of dissolved gases (H_2S, CO_2 and NH_3). This water is treated in sour water stripping units and either recycled to slurry preparation or further treated in a zero-liquid discharge ("ZLD") system to recover and reuse water. Solid waste from the ZLD is landfilled.

The power block for the IGCC Facility case is based on a two-on-one combined-cycle configuration using F-class CTs. The combined cycle is similar to the Conventional NGCC Facility except the CTs are designed to combust natural gas and/or syngas, and the combustors are not DLN. Figure 10-1 presents the IGCC process flow diagram.

FIGURE 10-1 – IGCC DESIGN CONFIGURATION

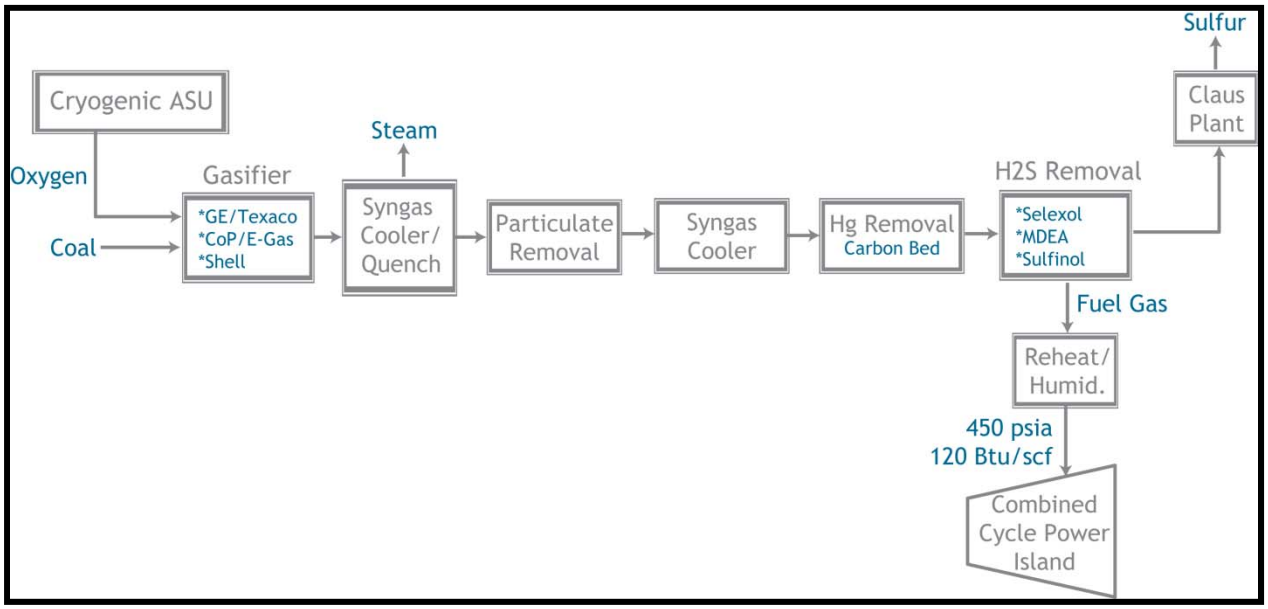

10.2 ELECTRICAL AND CONTROL SYSTEMS

The IGCC Facility has two CT electric generators and one ST electric generator. The generators for the CTs are 60 Hz machines rated at approximately 255 MVA with an output voltage of 18 kV. The ST electric generator is a 60 Hz machine rated at approximately 333 MVA with an output voltage of 18 kV. Each CT electric generator is connected to a high-voltage bus in the IGCC Facility switchyard via a dedicated generator circuit breaker, GSU, and a disconnect switch. The ST electric generator is connected directly to its GSU and connected through a disconnect switch between two breakers on the high-voltage bus. The GSUs increase the voltage from the electric generators from 18 kV to interconnected transmission system high voltage.

The IGCC Facility is controlled using a DCS. The DCS provides centralized control of the facility by integrating the control systems provided with each individual CT and associated electric generator, ST and associated electric generator, and the control of BOP systems and equipment.

10.3 OFF-SITE REQUIREMENTS

Coal is delivered to the IGCC Facility by rail, truck or barge. Water for all processes at the IGCC is obtained from one of several available water sources; however, water is typically sourced from an adjacent river, when possible. The IGCC uses a water treatment system and a high-efficiency reverse osmosis system to reduce the dissolved solids from the cooling water and to provide distilled water for HRSG makeup. Wastewater is sent to an adjacent river or other approved wastewater delivery point. Further, the electrical interconnection from the IGCC on-site switchyard is effectuated by a connection to an adjacent utility substation.

10.4 CAPITAL COST ESTIMATE

The base Cost Estimate for the IGCC Facility with a nominal capacity of 600 MW is $3,565/kW and with a nominal capacity of 1,200 MW is $3,221/kW. Table 10-1 and Table 10-2 summarize the Cost Estimate categories for the IGCC Facility.

TABLE 10-1 – BASE PLANT SITE CAPITAL COST ESTIMATE FOR IGCC

Technology:	IGCC	
Nominal Capacity (ISO):	600,000 kW	
Nominal Heat Rate (ISO):	8,700 Btu/kWh-HHV	
Capital Cost Category		**(000s) (October 1, 2010$)**
Civil Structural Material and Installation		102,121
Mechanical Equipment Supply and Installation		975,212
Electrical / I&C Supply and Installation		200,708
Project Indirects (1)		313,558
EPC Cost before Contingency and Fee		1,591,599
Fee and Contingency		190,992
Total Project EPC		1,782,591
Owner Costs (excluding project finance)		356,518
Total Project Cost (excluding finance)		2,139,109
Total Project EPC	/ kW	2,971
Owner Costs 20% (excluding project finance)	/ kW	594
Total Project Cost (excluding project finance)	/ kW	3,565

(1) Includes engineering, distributable costs, scaffolding, construction management, and start-up.

TABLE 10-2 – BASE PLANT SITE CAPITAL COST ESTIMATE FOR IGCC

Technology:	IGCC
Nominal Capacity (ISO):	1,200,000 kW
Nominal Heat Rate (ISO):	8,700 Btu/kWh-HHV

Capital Cost Category		(000s) (October 1, 2010$)
Civil Structural Material and Installation		178,606
Mechanical Equipment Supply and Installation		1,859,974
Electrical / I&C Supply and Installation		364,745
Project Indirects (1)		521,600
EPC Cost before Contingency and Fee		2,924,925
Fee and Contingency		350,991
Total Project EPC		3,275,916
Owner Costs (excluding project finance)		589,665
Total Project Cost (excluding finance)		3,865,581
Total Project EPC	/ kW	2730
Owner Costs 18% (excluding project finance)	/ kW	491
Total Project Cost (excluding project finance)	/ kW	3,221

(1) Includes engineering, distributable costs, scaffolding, construction management, and start-up.

For this type of technology and power plant configuration, our regional adjustments took into consideration the following: outdoor installation considerations, seismic design differences, remote location issues, labor wage and productivity differences, location adjustments, owner cost differences, and the increase in overheads associated with these six adjustments.

Outdoor installation locations are considered in geographic areas where enclosed structures for the boilers would not be required due to the low probability of freezing. The locations that included outdoor installation are Alabama, Arizona, Arkansas, Florida, Georgia, Hawaii, Louisiana, Mississippi, New Mexico, South Carolina, and Puerto Rico.

Seismic design differences among the various locations were based on U.S. seismic map information that detailed the various seismic zones throughout the U.S. No cost increases were associated with seismic Zone 0 and cost step increases were considered for Zones 1, 2, 3 and 4.

Remote locations issues are related to geographic areas that typically require installation of man camps, higher craft incentives, and higher per diems for construction, because such areas are long distances from urban areas, where labor is generally abundant. Remote location designations were also considered in locations where higher equipment freight costs are typically incurred, which for example are regions not near established rail or highway access. Remote locations related to the IGCC Facility include Fairbanks, Alaska; Honolulu, Hawaii; Albuquerque, New Mexico; Cheyenne, Wyoming; and Cayey, Puerto Rico.

Labor wage and productivity differences were handled as discussed in Section 2.5.1, taking into consideration the amount of labor we estimated for the IGCC Facility.

Location adjustments were made to locations where higher cost of living levels are incurred and/or where population density generally correlates to higher construction costs for power and other infrastructure projects. These locations include Alaska, California, Connecticut, Delaware, District of Columbia, Hawaii, Illinois, Maine, Maryland, Massachusetts, Michigan, Minnesota, New York, Ohio, and Wisconsin.

Owner costs were reviewed based on the need for utility upgrades and/or infrastructure costs such as new facility transmission lines to tie to existing utility transmission substations or existing transmission lines.

Table 10-3 and Table 10-4 present the IGCC Facility capital cost variations for alternative U.S. plant locations.

TABLE 10-3 – LOCATION-BASED COSTS FOR IGCC (600,000 KW)
(OCTOBER 1, 2010 DOLLARS)

State	City	Base Project Cost ($/kW)	Location Percent Variation	Delta Cost Difference ($/kW)	Total Location Project Cost ($/kW)
Alaska	Anchorage	3,565	29.4%	1,049	4,614
Alaska	Fairbanks	3,565	28.5%	1,016	4,581
Alabama	Huntsville	3,565	-6.5%	(232)	3,333
Arizona	Phoenix	3,565	-4.5%	(160)	3,405
Arkansas	Little Rock	3,565	-4.7%	(167)	3,398
California	Los Angeles	3,565	18.1%	645	4,210
California	Redding	3,565	8.7%	312	3,877
California	Bakersfield	3,565	8.4%	299	3,864
California	Sacramento	3,565	12.8%	455	4,020
California	San Francisco	3,565	37.6%	1,342	4,907
Colorado	Denver	3,565	-5.2%	(187)	3,378
Connecticut	Hartford	3,565	23.7%	846	4,411
Delaware	Dover	3,565	20.6%	734	4,299
District of Columbia	Washington	3,565	35.6%	1,269	4,834
Florida	Tallahassee	3,565	-9.5%	(339)	3,226
Florida	Tampa	3,565	-4.3%	(152)	3,413
Georgia	Atlanta	3,565	-7.1%	(252)	3,313
Hawaii	Honolulu	0		0	
Idaho	Boise	3,565	-3.2%	(113)	3,452
Illinois	Chicago	3,565	17.4%	619	4,184
Indiana	Indianapolis	3,565	2.9%	103	3,668
Iowa	Davenport	3,565	-1.4%	(48)	3,517
Iowa	Waterloo	3,565	-7.8%	(279)	3,286
Kansas	Wichita	3,565	-5.8%	(208)	3,357
Kentucky	Louisville	3,565	-4.8%	(172)	3,393
Louisiana	New Orleans	3,565	-9.8%	(348)	3,217
Maine	Portland	3,565	-0.4%	(14)	3,551
Maryland	Baltimore	3,565	4.3%	153	3,718
Massachusetts	Boston	3,565	31.3%	1,115	4,680
Michigan	Detroit	3,565	3.4%	120	3,685
Michigan	Grand Rapids	3,565	-6.8%	(243)	3,322
Minnesota	St. Paul	3,565	3.4%	123	3,688
Mississippi	Jackson	3,565	-6.5%	(230)	3,335
Missouri	St. Louis	3,565	6.4%	227	3,792
Missouri	Kansas City	3,565	3.0%	107	3,672
Montana	Great Falls	3,565	-3.7%	(131)	3,434
Nebraska	Omaha	3,565	-3.0%	(108)	3,457
New Hampshire	Concord	3,565	-1.4%	(49)	3,516
New Jersey	Newark	3,565	13.5%	480	4,045

State	City	Base Project Cost ($/kW)	Location Percent Variation	Delta Cost Difference ($/kW)	Total Location Project Cost ($/kW)
New Mexico	Albuquerque	3,565	-3.4%	(120)	3,445
New York	New York	3,565	28.4%	1,013	4,578
New York	Syracuse	3,565	9.7%	345	3,910
Nevada	Las Vegas	3,565	8.1%	290	3,855
North Carolina	Charlotte	3,565	-8.3%	(296)	3,269
North Dakota	Bismarck	3,565	-6.9%	(247)	3,318
Ohio	Cincinnati	3,565	0.4%	16	3,581
Oregon	Portland	3,565	8.5%	303	3,868
Pennsylvania	Philadelphia	3,565	10.6%	377	3,942
Pennsylvania	Wilkes-Barre	3,565	-3.0%	(107)	3,458
Rhode Island	Providence	3,565	3.6%	129	3,694
South Carolina	Spartanburg	3,565	-10.2%	(364)	3,201
South Dakota	Rapid City	3,565	-9.3%	(331)	3,234
Tennessee	Knoxville	3,565	-7.7%	(276)	3,289
Texas	Houston	3,565	-8.3%	(294)	3,271
Utah	Salt Lake City	3,565	-2.6%	(91)	3,474
Vermont	Burlington	3,565	-4.6%	(162)	3,403
Virginia	Alexandria	3,565	8.8%	313	3,878
Virginia	Lynchburg	3,565	-1.6%	(56)	3,509
Washington	Seattle	3,565	11.3%	404	3,969
Washington	Spokane	3,565	-2.0%	(70)	3,495
West Virginia	Charleston	3,565	-1.5%	(55)	3,510
Wisconsin	Green Bay	3,565	0.5%	19	3,584
Wyoming	Cheyenne	3,565	3.7%	132	3,697
Puerto Rico	Cayey	0		0	0

TABLE 10-4 – LOCATION-BASED COSTS FOR IGCC (1,200,000 KW)

(OCTOBER 1, 2010 DOLLARS)

State	City	Base Project Cost ($/kW)	Location Percent Variation	Delta Cost Difference ($/kW)	Total Location Project Cost ($/kW)
Alaska	Anchorage	3,221	32.0%	1,031	4,252
Alaska	Fairbanks	3,221	30.9%	996	4,217
Alabama	Huntsville	3,221	-6.7%	(216)	3,005
Arizona	Phoenix	3,221	-4.6%	(147)	3,074
Arkansas	Little Rock	3,221	-4.8%	(154)	3,067
California	Los Angeles	3,221	19.8%	637	3,858
California	Redding	3,221	9.6%	308	3,529
California	Bakersfield	3,221	9.2%	296	3,517
California	Sacramento	3,221	13.7%	442	3,663
California	San Francisco	3,221	40.8%	1,313	4,534
Colorado	Denver	3,221	-5.4%	(173)	3,048
Connecticut	Hartford	3,221	26.0%	836	4,057
Delaware	Dover	3,221	22.7%	730	3,951
District of Columbia	Washington	3,221	39.5%	1,272	4,493
Florida	Tallahassee	3,221	-9.9%	(318)	2,903
Florida	Tampa	3,221	-4.4%	(143)	3,078
Georgia	Atlanta	3,221	-7.3%	(235)	2,986
Hawaii	Honolulu	-		-	
Idaho	Boise	3,221	-3.2%	(102)	3,119
Illinois	Chicago	3,221	18.2%	586	3,807
Indiana	Indianapolis	3,221	3.3%	107	3,328
Iowa	Davenport	3,221	-1.4%	(45)	3,176
Iowa	Waterloo	3,221	-8.1%	(261)	2,960
Kansas	Wichita	3,221	-6.0%	(192)	3,029
Kentucky	Louisville	3,221	-4.9%	(158)	3,063
Louisiana	New Orleans	3,221	-10.1%	(326)	2,895
Maine	Portland	3,221	0.0%	(1)	3,220
Maryland	Baltimore	3,221	5.0%	162	3,383
Massachusetts	Boston	3,221	33.8%	1,087	4,308
Michigan	Detroit	3,221	3.5%	114	3,335
Michigan	Grand Rapids	3,221	-7.1%	(227)	2,994
Minnesota	St. Paul	3,221	3.6%	117	3,338
Mississippi	Jackson	3,221	-6.6%	(214)	3,007
Missouri	St. Louis	3,221	6.9%	221	3,442
Missouri	Kansas City	3,221	3.2%	103	3,324
Montana	Great Falls	3,221	-3.7%	(119)	3,102
Nebraska	Omaha	3,221	-3.1%	(99)	3,122
New Hampshire	Concord	3,221	-1.3%	(42)	3,179
New Jersey	Newark	3,221	14.0%	449	3,670

State	City	Base Project Cost ($/kW)	Location Percent Variation	Delta Cost Difference ($/kW)	Total Location Project Cost ($/kW)
New Mexico	Albuquerque	3,221	-3.4%	(109)	3,112
New York	New York	3,221	29.5%	949	4,170
New York	Syracuse	3,221	10.8%	349	3,570
Nevada	Las Vegas	3,221	8.6%	278	3,499
North Carolina	Charlotte	3,221	-8.5%	(273)	2,948
North Dakota	Bismarck	3,221	-7.2%	(230)	2,991
Ohio	Cincinnati	3,221	0.8%	25	3,246
Oregon	Portland	3,221	9.3%	300	3,521
Pennsylvania	Philadelphia	3,221	11.0%	355	3,576
Pennsylvania	Wilkes-Barre	3,221	-3.0%	(96)	3,125
Rhode Island	Providence	3,221	3.9%	124	3,345
South Carolina	Spartanburg	3,221	-10.5%	(337)	2,884
South Dakota	Rapid City	3,221	-9.6%	(309)	2,912
Tennessee	Knoxville	3,221	-7.9%	(256)	2,965
Texas	Houston	3,221	-8.5%	(275)	2,946
Utah	Salt Lake City	3,221	-2.4%	(76)	3,145
Vermont	Burlington	3,221	-4.6%	(148)	3,073
Virginia	Alexandria	3,221	9.9%	320	3,541
Virginia	Lynchburg	3,221	-1.3%	(41)	3,180
Washington	Seattle	3,221	12.3%	395	3,616
Washington	Spokane	3,221	-1.9%	(62)	3,159
West Virginia	Charleston	3,221	-1.5%	(49)	3,172
Wisconsin	Green Bay	3,221	0.8%	27	3,248
Wyoming	Cheyenne	3,221	4.6%	148	3,369
Puerto Rico	Cayey	0	0	0	0

10.5 O&M ESTIMATE

In addition to the general O&M items discussed in Section 2.5.2, IGCC Facility includes the major maintenance for the CTs, as well as the BOP, including the ST, associated electric generators, HRSGs, and emissions reduction catalysts. Additionally, provisions need to be made for routine and major maintenance for the gasification systems, the ASU, and associated gasification auxiliary equipment needs to be made. For example, major maintenance for the gasifier includes repair and replacement of the refractory. Typically, significant overhauls on an IGCC Facility occur no less frequently than 18 months and the cycle for the power generation equipment is similar to the to the Advanced NGCC discussed above. Table 10-5 and Table 10-6 present the O&M expenses for the IGCC Facility.

TABLE 10-5 – O&M EXPENSES FOR IGCC (600,000 KW)

Technology:	IGCC
Fixed O&M Expense	$59.23/kW-year
Variable O&M Expense	$6.87/MWh

TABLE 10-6 – O&M EXPENSES FOR IGCC (1,200,000 KW)

Technology:	IGCC
Fixed O&M Expense	$48.90/kW-year
Variable O&M Expense	$6.87/MWh

10.6 ENVIRONMENTAL COMPLIANCE INFORMATION

The IGCC uses syngas combustors (which do not have DLN) in the CT and best available burner technology with respect to the duct burners in the HRSGs to manage the production of NO_X and CO. Additional control of NO_X and CO is accomplished through an SCR and an oxidization catalyst, respectively. SO_2 in the IGCC is managed through the removal of sulfur in the syngas via the AGR system prior to combustion. The IGCC does not include any control devices for CO_2, which is proportional to the heat rate (inversely proportional to the efficiency) of the technology. Water, wastewater, and solid waste compliance are achieved through traditional on-site and off-site methods, and the costs for such compliance are included in the O&M Estimate for the IGCC. Table 10-7 presents environmental emissions for the IGCC Facility.

TABLE 10-7 – ENVIRONMENTAL EMISSIONS FOR IGCC

Technology:	IGCC
NO_X	0.0075 lb/MMBtu
SO_2	0.025 lb/MMBtu
CO_2	206 lb/MMBtu

11. INTEGRATED GASIFICATION COMBINED CYCLE WITH CCS (IGCC/CCS)

11.1 MECHANICAL EQUIPMENT AND SYSTEMS

The plant configuration for the IGCC/CCS Facility case is the same as the IGCC Facility case with the exceptions that: (1) a water gas shift reactor system is substituted instead of the COS hydrolysis system upstream of the AGR; and (2) a two-stage Selexol AGR system is utilized instead of a single stage to allow the capture of CO_2 from the syngas prior to combustion. The captured CO_2 is compressed to approximately 2,000 psia for injection into a pipeline at the plant fence line. The IGCC/CCS Facility produces 690 MW of gross power and 520 MW of net power. Figure 11-1 presents the IGCC/CCS process flow diagram.

FIGURE 11-1 – IGCC/CCS DESIGN CONFIGURATION

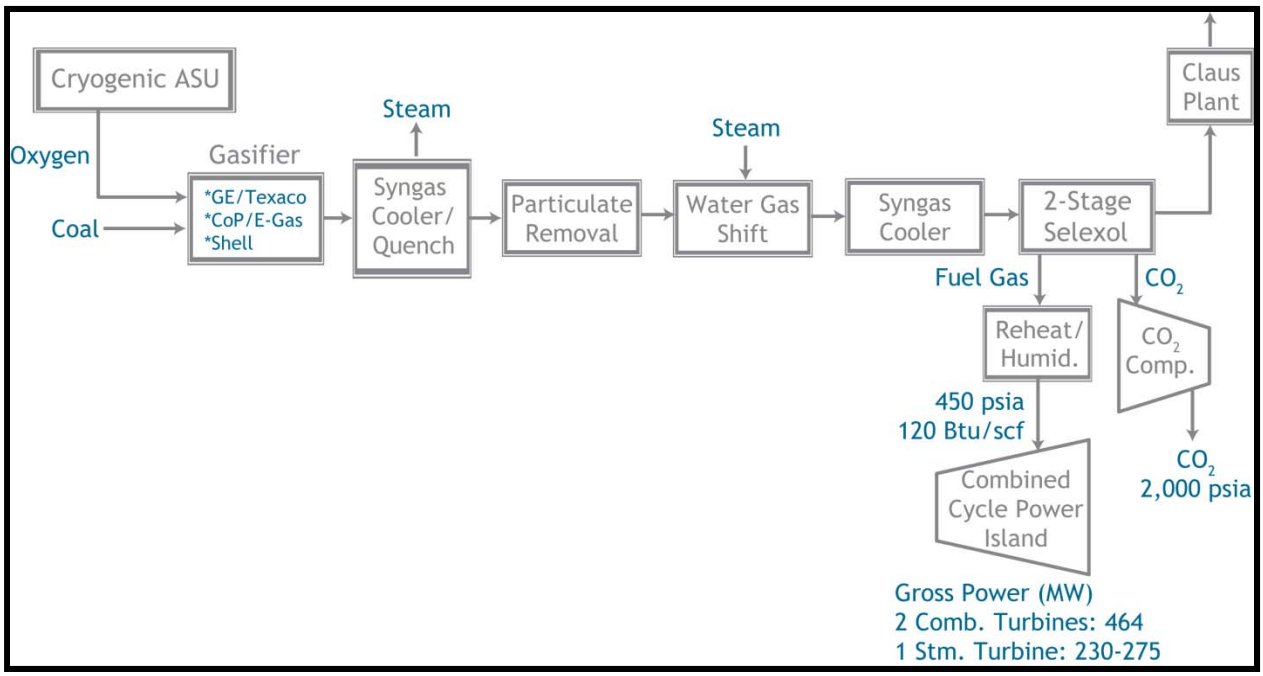

11.2 ELECTRICAL AND CONTROL SYSTEMS

The electrical and control systems for the IGCC/CCS Facility are materially similar to the IGCC Facility (without CCS) discussed in Section 10.2.

11.3 OFF-SITE REQUIREMENTS

The off-site requirements for the IGCC/CCS Facility are materially similar to the IGCC Facility (without CCS) discussed in Section 10.3, except that an interconnection needs to be made with respect to the sequestration of CO_2.

11.4 CAPITAL COST ESTIMATE

The base Cost Estimate for the IGCC/CCS Facility with a nominal capacity of 520 MW is $5,348/kW. Table 11-1 summarizes the Cost Estimate categories for the IGCC/CCS Facility.

TABLE 11-1 – BASE PLANT SITE CAPITAL COST ESTIMATE FOR IGCC/CCS

Technology:	**IGCC/CCS**	
Nominal Capacity (ISO):	**520,000 kW**	
Nominal Heat Rate (ISO):	**10,700 Btu/kWh-HHV**	
Capital Cost Category		**(000s) (October 1, 2010$)**
Total Project EPC		**2,317,500**
Owner Costs (excluding project finance)		**463,500**
Total Project Cost (excluding finance)		**2,781,000**
Total Project EPC	**/ kW**	**4,458**
Owner Costs 20% (excluding project finance)	**/ kW**	**892**
Total Project Cost (excluding project finance)	**/ kW**	**5,350**

(1) Includes engineering, distributable costs, scaffolding, construction management, and start-up.

The locational considerations for the IGCC/CCS Facility are the same as those set forth in Section 10.4 for the IGCC Facility.

Table 11-2 presents the IGCC/CCS Facility capital cost variations for alternative U.S. plant locations.

TABLE 11-2 – LOCATION-BASED COSTS FOR IGCC/CCS
(OCTOBER 1, 2010 DOLLARS)

State	City	Base Project Cost ($/kW)	Location Percent Variation	Delta Cost Difference ($/kW)	Total Location Project Cost ($/kW)
Alaska	Anchorage	5,350	23.1%	1,236	6,586
Alaska	Fairbanks	5,350	22.9%	1,225	6,575
Alabama	Huntsville	5,350	-7.4%	(397)	4,953
Arizona	Phoenix	5,350	-5.5%	(293)	5,057
Arkansas	Little Rock	5,350	-5.7%	(306)	5,044
California	Los Angeles	5,350	13.7%	732	6,082
California	Redding	5,350	6.5%	348	5,698
California	Bakersfield	5,350	6.1%	326	5,676
California	Sacramento	5,350	11.1%	591	5,941
California	San Francisco	5,350	30.7%	1,642	6,992
Colorado	Denver	5,350	-6.3%	(335)	5,015
Connecticut	Hartford	5,350	17.7%	946	6,296
Delaware	Dover	5,350	14.5%	774	6,124
District of Columbia	Washington	5,350	23.0%	1,229	6,579
Florida	Tallahassee	5,350	-10.5%	(561)	4,789
Florida	Tampa	5,350	-4.5%	(243)	5,107
Georgia	Atlanta	5,350	-8.1%	(432)	4,918
Hawaii	Honolulu	0	0	0	0
Idaho	Boise	5,350	-4.2%	(227)	5,123
Illinois	Chicago	5,350	17.9%	959	6,309
Indiana	Indianapolis	5,350	1.2%	67	5,417
Iowa	Davenport	5,350	-1.5%	(82)	5,268
Iowa	Waterloo	5,350	-8.9%	(474)	4,876
Kansas	Wichita	5,350	-6.9%	(370)	4,980
Kentucky	Louisville	5,350	-5.8%	(309)	5,041
Louisiana	New Orleans	5,350	-10.8%	(577)	4,773
Maine	Portland	5,350	-2.8%	(151)	5,199
Maryland	Baltimore	5,350	1.1%	60	5,410
Massachusetts	Boston	5,350	26.2%	1,402	6,752
Michigan	Detroit	5,350	3.5%	185	5,535
Michigan	Grand Rapids	5,350	-7.7%	(413)	4,937
Minnesota	St. Paul	5,350	3.4%	181	5,531
Mississippi	Jackson	5,350	-7.4%	(394)	4,956
Missouri	St. Louis	5,350	5.5%	295	5,645
Missouri	Kansas City	5,350	2.7%	145	5,495
Montana	Great Falls	5,350	-4.8%	(259)	5,091
Nebraska	Omaha	5,350	-3.8%	(201)	5,149
New Hampshire	Concord	5,350	-2.2%	(119)	5,231
New Jersey	Newark	5,350	14.9%	795	6,145

State	City	Base Project Cost ($/kW)	Location Percent Variation	Delta Cost Difference ($/kW)	Total Location Project Cost ($/kW)
New Mexico	Albuquerque	5,350	-4.4%	(235)	5,115
New York	New York	5,350	31.4%	1,681	7,031
New York	Syracuse	5,350	5.5%	295	5,645
Nevada	Las Vegas	5,350	7.7%	410	5,760
North Carolina	Charlotte	5,350	-10.1%	(538)	4,812
North Dakota	Bismarck	5,350	-7.8%	(419)	4,931
Ohio	Cincinnati	5,350	-1.5%	(82)	5,268
Oregon	Portland	5,350	6.2%	333	5,683
Pennsylvania	Philadelphia	5,350	11.3%	602	5,952
Pennsylvania	Wilkes-Barre	5,350	-4.1%	(217)	5,133
Rhode Island	Providence	5,350	3.4%	183	5,533
South Carolina	Spartanburg	5,350	-12.0%	(640)	4,710
South Dakota	Rapid City	5,350	-10.5%	(562)	4,788
Tennessee	Knoxville	5,350	-9.1%	(486)	4,864
Texas	Houston	5,350	-9.3%	(499)	4,851
Utah	Salt Lake City	5,350	-4.6%	(245)	5,105
Vermont	Burlington	5,350	-5.8%	(311)	5,039
Virginia	Alexandria	5,350	4.5%	241	5,591
Virginia	Lynchburg	5,350	-3.8%	(203)	5,147
Washington	Seattle	5,350	9.4%	505	5,855
Washington	Spokane	5,350	-2.9%	(154)	5,196
West Virginia	Charleston	5,350	-2.1%	(111)	5,239
Wisconsin	Green Bay	5,350	-1.1%	(58)	5,292
Wyoming	Cheyenne	5,350	-0.5%	(29)	5,321
Puerto Rico	Cayey	0	0	0	0

11.5 O&M ESTIMATE

The O&M methodology for the IGCC/CCS Facility is the same as that set forth in the section on the IGCC Facility, except that consideration needs to be made for the additional maintenance resulting from the CCS equipment.

Table 11-3 presents the O&M expenses for the IGCC/CCS Facility.

TABLE 11-3 – O&M EXPENSES FOR IGCC/CCS

Technology:	IGCC/CCS
Fixed O&M Expense	$69.30/kW-year
Variable O&M Expense	$8.04/MWh

11.6 ENVIRONMENTAL COMPLIANCE INFORMATION

The environmental compliance strategy for the IGCC/CCS Facility is the same as that set forth in the section on the IGCC Facility, except for CCS including a two-stage Selexol AGR for capture of CO_2. Table 11-4 presents environmental emissions for the IGCC/CCS Facility.

TABLE 11-4 – ENVIRONMENTAL EMISSIONS FOR IGCC/CCS

Technology:	IGCC/CCS
NO_X	0.0075 lb/MMBtu
SO_2	0.015 lb/MMBtu
CO_2	20.6 lb/MMBtu

12. ADVANCED NUCLEAR (AN)

12.1 MECHANICAL EQUIPMENT AND SYSTEMS

The Advanced Nuclear ("AN") Facility consists of two 1,117 MW Westinghouse AP1000 nuclear power units built in a brownfield (existing nuclear facility site).

The steam cycle of a nuclear powered electric generation facility is similar to other steam-powered generating facilities. The difference is with the source of heat used to generate steam. In units that use fossil fuels, hydrocarbons are burned to heat water, producing steam. In the AP1000, splitting the nucleus (fission) of uranium atoms provides the energy to heat the water.

Nuclear fuel is a uranium dioxide ceramic pellet encased in a zirconium alloy tube. The uranium atoms in the pellet absorb neutrons and split, or fission. When the uranium atom splits, a large amount of energy, as well as additional neutrons and fission fragments are released. The neutrons can be absorbed by other uranium atoms which fission, producing more neutrons. The chain reaction is controlled by controlling the number of neutrons available for fission. The number of neutrons available is controlled by the water in the nuclear reactor core, the arrangement of neutron absorbing control rods inserted into the core, the design of the core, and by controlling the void fraction and temperature of the coolant water (which both affect the density of water which affects the neutrons available for the fission process).

The uranium fuel is contained inside a pressurized water reactor ("PWR"). The AP1000 is a two-loop PWR. The fission of the uranium fuel releases heat to the surrounding water (reactor cooling water), which under pressure does not boil, but through a heat exchanger (typically referred to as a steam generator) results in a lower pressure water (that in the "secondary loop") to boil.

The cooling water inside the PWR is circulated through the nuclear core by internal pumps. This cooling water system is termed the Reactor Coolant System ("RCS"). The RCS consists of two heat transfer circuits, with each circuit containing one Delta-125 steam generator, two reactor coolant pumps, and a single hot leg and two cold legs for circulating coolant between the reactor and the steam generators. The system also includes a pressurizer, interconnecting piping, and the valves and instrumentation necessary for operational control and the actuation of safeguards. Each AP1000 unit has a 130-foot diameter freestanding containment vessel with four ring sections and an upper and lower head.

The passive core cooling system provides protection for the facility against RCS leaks and ruptures. The passive containment cooling system is the ultimate safety-related ultimate heat sink for the facility. The passive containment cooling system cools the containment following an accident to rapidly reduce the pressure via the natural circulation of air supplemented by water evaporation to transfer heat through the steel containment vessel.

Main steam from the steam generator is routed to the HP section of the ST. The ST consists of a double-flow HP ST section and three double-flow LP ST sections in a tandem-compound configuration. As the steam exits the HP section it passes through a moisture separator and reheater. The moisture separator and reheater dries and reheats the steam before it enters the LP ST section, which improves the cycle efficiency and reduces moisture related erosion of the LP ST blades. A portion of the steam is extracted from the HP and LP sections of the ST and with

ST exhaust heats the condensate and feedwater before it is sent back to the reactor. The HP and LP STs are connected via a common shaft that drives the generator which produces the electrical power output of approximately 1,100 MW per unit.

The steam that exits the LP section of the ST, as well as the drains from the feedwater heaters, are directed to the condenser. The condenser is a surface condensing (tube type) heat exchanger that is maintained under vacuum to increase the turbine efficiency. The steam condenses on the outside of the tubes and condenser cooling water is circulated through the inside of the tubes.

Numerous other systems are needed to support and provide redundancy for the cycle process described herein. These include the residual heat removal system, the HP core flooder system, and the LP core flooder system which are redundant systems and are designed to remove heat from the reactor core in the event the normal core cooling system fails. Other support systems include the liquid and solid radioactive waste systems which handle, control, and process radioactive waste from the plant. The reactor containment ventilation system controls and filters airborne radiation. Figure 12-1 presents a simplified process flow diagram for a PWR AN plant.

FIGURE 12-1 – AN DESIGN CONFIGURATION

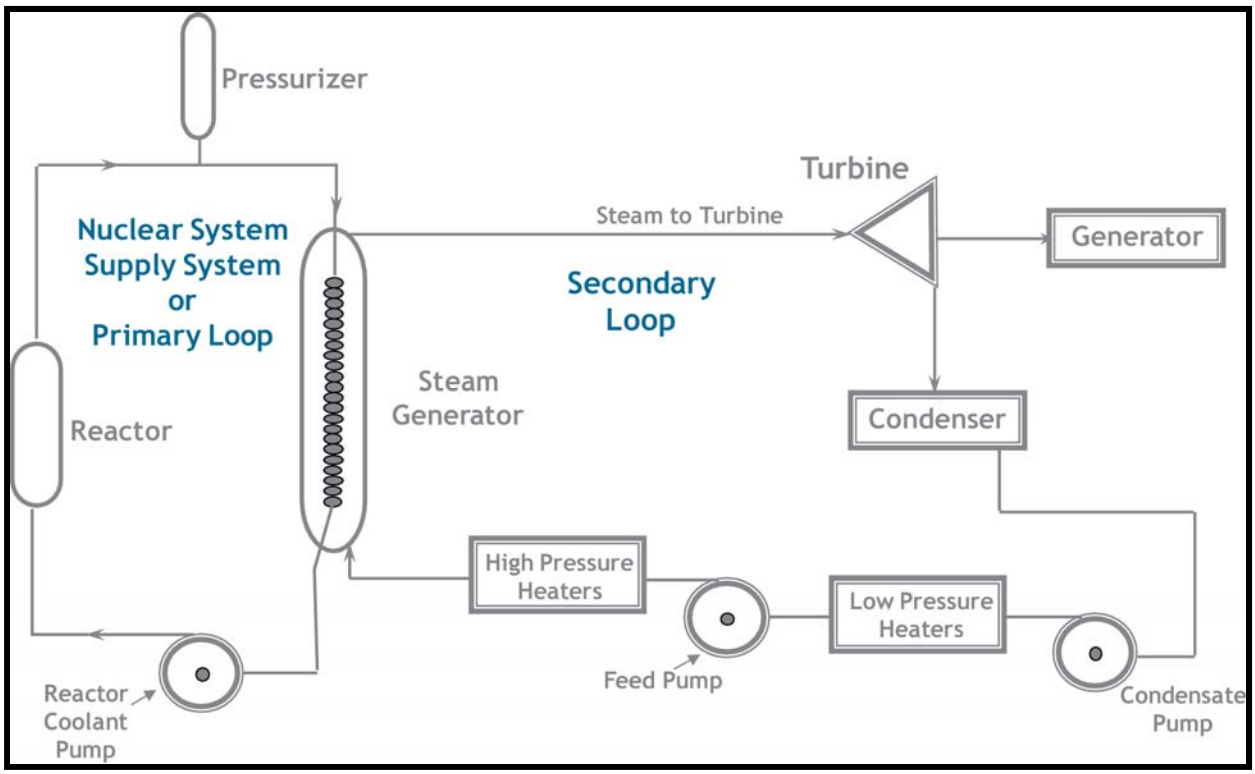

12.2 ELECTRICAL AND CONTROL SYSTEMS

The AN Facility has one ST electric generator for each reactor. Each generator is a 60 Hz machine rated at approximately 1,250 MVA with an output voltage of 24 kV. The ST electric generator is connected through a generator circuit breaker to a GSU that is in turn connected between two circuit breakers in the high-voltage bus in the facility switchyard through a disconnect switch. The GSU increases the voltage from the electric generator from 24 kV to interconnected transmission system high voltage.

The AN Facility is controlled using a DCS. The DCS provides centralized control of the facility by integrating the control systems provided with the reactor, ST and associated electric generator and the control of BOP systems and equipment.

12.3 OFF-SITE REQUIREMENTS

Water for all processes at the AN Facility is obtained from one of several available water supply options; however, water is typically sourced from an adjacent river, when possible. The AN Facility uses a water treatment system and a high-efficiency reverse osmosis system to reduce the dissolved solids from the cooling water and to provide distilled water. Wastewater is sent to an adjacent river or other approved wastewater delivery point. Further, the electrical interconnection from the AN on-site switchyard is effectuated by a connection to an adjacent utility substation.

12.4 CAPITAL COST ESTIMATE

The base Cost Estimate for the AN Facility with a nominal capacity of 2,236 MW is $5,339/kW. Table 12-1 summarizes the Cost Estimate categories for the AN Facility.

TABLE 12-1 – BASE PLANT SITE CAPITAL COST ESTIMATE FOR AN

Technology:	**AN**	
Nominal Capacity (ISO):	**2,236,000 kW**	
Nominal Heat Rate (ISO):	**N/A Btu/kWh-HHV**	
Capital Cost Category		**(000s) (October 1, 2010$)**
Civil Structural Material and Installation		**1,732,000**
Mechanical Equipment Supply and Installation		**3,400,000**
Electrical / I&C Supply and Installation		**630,000**
Project Indirects (1)		**2,722,500**
EPC Cost before Contingency and Fee		**8,484,500**
Fee and Contingency		**1,300,000**
Total Project EPC		**9,784,500**
Owner Costs (excluding project finance)		**2,152,590**
Total Project Cost (excluding finance)		**11,937,090**
Total Project EPC	**/ kW**	**4,376**
Owner Costs 22% (excluding project finance)	**/ kW**	**963**
Total Project Cost (excluding project finance)	**/ kW**	**5,339**

(1) Includes engineering, distributable costs, scaffolding, construction management, and start-up.

For this type of technology and power plant configuration, our regional adjustments took into consideration the following: seismic design differences, remote location issues, labor wage and productivity differences, location adjustments, owner cost differences, and the increase in overheads associated with these five adjustments.

Seismic design differences among the various locations were based on U.S. seismic map information that detailed the various seismic zones throughout the U.S. No cost increases were associated with seismic Zone 0 and cost step increases were considered for Zones 1, 2, 3 and 4.

Remote location issues are related to geographic areas that typically require installation of man camps, higher craft incentives, and higher per diems are generally required with respect to construction, due to the fact that such areas are long distances from urban areas, where labor is generally abundant. Remote location designations were also considered in locations where higher equipment freight costs are typically incurred, which for example are regions not near established rail or highway access. Remote locations related to the Advanced Nuclear Facility

include Fairbanks, Alaska; Honolulu, Hawaii; Albuquerque, New Mexico; Cheyenne, Wyoming; and Cayey, Puerto Rico.

Labor wage and productivity differences were handled as discussed in Section 2.5.1, taking into consideration the amount of labor we estimated for the AN Facility.

Location adjustments were made to locations where higher cost of living levels are incurred and/or where population density generally correlates to higher construction costs for power and other infrastructure projects. These locations include Alaska, California, Connecticut, Delaware, District of Columbia, Hawaii, Illinois, Maine, Maryland, Massachusetts, Michigan, Minnesota, New York, Ohio, and Wisconsin.

Owner costs were reviewed based on the need for utility upgrades and/or infrastructure costs such as new facility transmission lines to tie to existing utility transmission substations or existing transmission lines.

Table 12-2 presents the AN Facility capital cost variations for alternative U.S. plant locations.

TABLE 12-2 – LOCATION-BASED COSTS FOR AN

(OCTOBER 1, 2010 DOLLARS)

State	City	Base Project Cost ($/kW)	Location Percent Variation	Delta Cost Difference ($/kW)	Total Location Project Cost ($/kW)
Alaska	Anchorage	5,340	16.3%	868	6,208
Alaska	Fairbanks	5,340	16.4%	878	6,218
Alabama	Huntsville	5,340	-3.3%	(174)	5,166
Arizona	Phoenix	5,340	-2.4%	(126)	5,214
Arkansas	Little Rock	5,340	-2.5%	(131)	5,209
California	Los Angeles	5,340	9.5%	505	5,845
California	Redding	5,340	4.6%	245	5,585
California	Bakersfield	5,340	4.4%	236	5,576
California	Sacramento	5,340	6.5%	348	5,688
California	San Francisco	5,340	20.9%	1,114	6,454
Colorado	Denver	5,340	-2.6%	(136)	5,204
Connecticut	Hartford	5,340	14.7%	784	6,124
Delaware	Dover	5,340	13.2%	707	6,047
District of Columbia	Washington	5,340	23.9%	1,275	6,615
Florida	Tallahassee	5,340	-4.6%	(248)	5,092
Florida	Tampa	5,340	-2.1%	(114)	5,226
Georgia	Atlanta	5,340	-3.5%	(189)	5,151
Hawaii	Honolulu	0	0	0	0
Idaho	Boise	5,340	-1.6%	(86)	5,254
Illinois	Chicago	5,340	9.0%	479	5,819
Indiana	Indianapolis	5,340	2.0%	108	5,448
Iowa	Davenport	5,340	-0.6%	(35)	5,305
Iowa	Waterloo	5,340	-3.7%	(200)	5,140
Kansas	Wichita	5,340	-2.8%	(151)	5,189
Kentucky	Louisville	5,340	-2.4%	(126)	5,214

State	City	Base Project Cost ($/kW)	Location Percent Variation	Delta Cost Difference ($/kW)	Total Location Project Cost ($/kW)
Louisiana	New Orleans	5,340	-4.8%	(254)	5,086
Maine	Portland	5,340	0.4%	21	5,361
Maryland	Baltimore	5,340	3.4%	180	5,520
Massachusetts	Boston	5,340	18.3%	976	6,316
Michigan	Detroit	5,340	1.6%	83	5,423
Michigan	Grand Rapids	5,340	-3.3%	(174)	5,166
Minnesota	St. Paul	5,340	1.9%	99	5,439
Mississippi	Jackson	5,340	-3.2%	(173)	5,167
Missouri	St. Louis	5,340	2.8%	148	5,488
Missouri	Kansas City	5,340	1.3%	70	5,410
Montana	Great Falls	5,340	-1.9%	(100)	5,240
Nebraska	Omaha	5,340	-1.5%	(80)	5,260
New Hampshire	Concord	5,340	-0.8%	(41)	5,299
New Jersey	Newark	5,340	6.4%	340	5,680
New Mexico	Albuquerque	5,340	-1.6%	(83)	5,257
New York	New York	5,340	13.4%	718	6,058
New York	Syracuse	5,340	6.6%	355	5,695
Nevada	Las Vegas	5,340	4.1%	220	5,560
North Carolina	Charlotte	5,340	-4.1%	(218)	5,122
North Dakota	Bismarck	5,340	-3.3%	(176)	5,164
Ohio	Cincinnati	5,340	0.8%	45	5,385
Oregon	Portland	5,340	4.5%	239	5,579
Pennsylvania	Philadelphia	5,340	4.9%	263	5,603
Pennsylvania	Wilkes-Barre	5,340	-1.5%	(82)	5,258
Rhode Island	Providence	5,340	1.6%	87	5,427
South Carolina	Spartanburg	5,340	-5.1%	(272)	5,068
South Dakota	Rapid City	5,340	-4.4%	(237)	5,103
Tennessee	Knoxville	5,340	-3.7%	(200)	5,140
Texas	Houston	5,340	-3.9%	(210)	5,130
Utah	Salt Lake City	5,340	-1.5%	(80)	5,260
Vermont	Burlington	5,340	-2.3%	(122)	5,218
Virginia	Alexandria	5,340	6.2%	332	5,672
Virginia	Lynchburg	5,340	-0.1%	(6)	5,334
Washington	Seattle	5,340	5.8%	311	5,651
Washington	Spokane	5,340	-1.0%	(56)	5,284
West Virginia	Charleston	5,340	-0.8%	(42)	5,298
Wisconsin	Green Bay	5,340	1.0%	51	5,391
Wyoming	Cheyenne	5,340	3.5%	188	5,528
Puerto Rico	Cayey	0	0	0	0

12.5 O&M ESTIMATE

In addition to the general items discussed in the section of this report entitled O&M Estimate, the AN Facility includes provisions for major maintenance on the steam generators, STs, electric generators, BOP systems, and the reactor (beyond refueling). Table 12-3 presents the O&M expenses for the AN Facility.

TABLE 12-3 – O&M EXPENSES FOR AN

Technology:	AN
Fixed O&M Expense	$88.75/kW-year
Variable O&M Expense	$2.04/MWh

12.6 ENVIRONMENTAL COMPLIANCE INFORMATION

Environmental compliance with respect to air emissions is effectively not necessary for the AN Facility, as this technology does not combust a fuel as is the case for other non-renewable power technologies. While there are environmental compliance considerations for a given nuclear facility (e.g., spent nuclear fuel), only air emissions were considered in this report. Table 12-4 presents environmental emissions for the AN Facility.

TABLE 12-4 – ENVIRONMENTAL EMISSIONS FOR AN

Technology:	AN
NO_X	0 lb/MMBtu
SO_2	0 lb/MMBtu
CO_2	0 lb/MMBtu

13. BIOMASS COMBINED CYCLE (BCC)

13.1 MECHANICAL EQUIPMENT AND SYSTEMS

The Biomass Combined-Cycle ("BCC") Facility utilizes approximately 500 tons per day of wood (at 25 percent moisture), or 370 dry tons per day for the production of 20 MW net of electricity. The facility consists of a biomass gasification system for the conversion of the wood to syngas, a clean-up system for the syngas, and a combined-cycle plant using the syngas as fuel.

The gasification system consists of dual circulating fluid bed ("CFB") units (one gasifier and one combustor) connected by a sand circulation system. Related equipment includes the wood feed system, the product gas quench, ash handling, steam supply and typical BOP equipment.

The wood is fed to the circulating fluid bed gasifier through a standard system of lock hoppers, live bottom bins and feed screws. The lock hoppers are purged with nitrogen to keep the produced fuel gas from escaping.

The gasifier is a refractory-lined vessel with a sand-type carrier and requires a LP steam source. The primary purpose of the steam is to maintain a reducing environment in the gasifier to enable pure gasification and not partial oxidation conditions. The gasification CFB is essentially an entrained flow reactor, which operates between 1,400°F and 1,500°F. The two products of the gasifier are a medium-heating value gas (approximately 450 Btu/scf dry) and non-converted char. A small amount of condensable "tars" are also produced. The gases are directed to a clean-up system to remove the entrained tars.

The CFB combustor unit burns the char produced in the gasifier. The char combustor operates at approximately 1,800°F. The flue gas from the char combustor goes to a boiler to recover the excess sensible energy.

The two CFBs are connected by the sand circulation system. The purpose of this system is to transfer the char and circulating sand from the gasifier to the combustor, where the char is burned to reheat the sand. This hotter sand is then returned to the gasifier to provide the energy to convert the solid wood to a gas. The sand transfer system consists of mechanical cyclones (two in series for each CFB) and a sand inventory pot for each leg of the configuration. An overflow system, with some fluidizing steam in the pot, is used to regulate the flow from the gasifier to the combustor.

The syngas clean-up system consists of a reformer to convert the tars and other hydrocarbons to CO and hydrogen in an isothermal fluidized bed reactor. The hot syngas is cooled by producing steam to be used in the combined cycle. A wet scrubber removes particulates, NH_3 and residual tars. The excess scrubber water is sent off-site to a wastewater treatment facility.

The syngas is then compressed to the required pressure for use in the CT. The BCC Facility is based on a single CT, which produces approximately 15 MW of electricity. The CT exhaust is sent to an HRSG. The HRSG is equipped with an SCR to reduce NO_X emissions. Both the steam generated in the HRSG and the steam generated the cooling of the combustion flue gas and the syngas are superheated and sent to the ST. The ST output is approximately 9 MW. The total gross output is approximately 24 MW. The internal power load is approximately 4 MW for a net power output of about 20 MW.

Nitrogen is required for start-up and shutdown. A separate steam system is required for start-up. NH_3 is required for operation of the two SCRs for reducing NO_X emissions. A flare system is required for normal operation to eliminate volatile organics from the scrubbing system, and for start-up and shutdown of the process. Figure 13-1 presents the BCC process flow diagram, where the "Power Block" is based on a traditional combined-cycle configuration, as is often the case for gasification derivative plants.

FIGURE 13-1 – BCC DESIGN CONFIGURATION

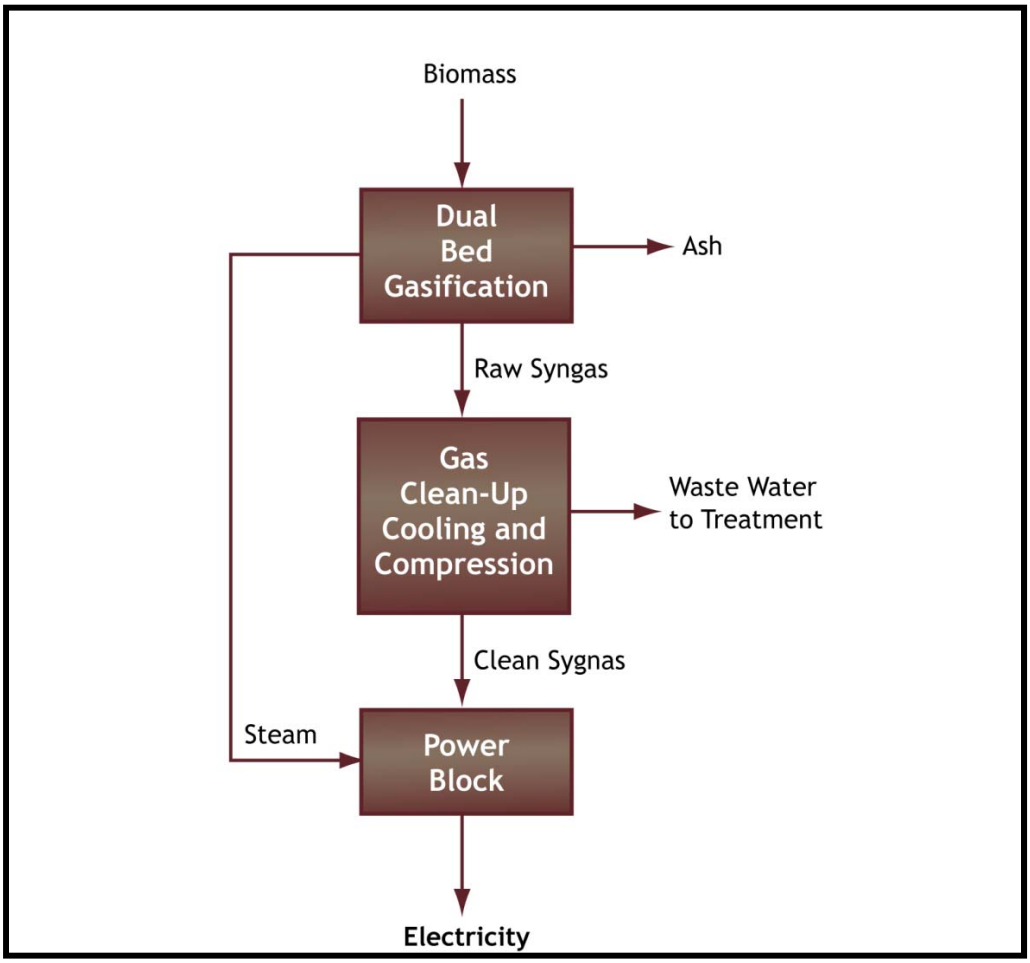

13.2 ELECTRICAL AND CONTROL SYSTEMS

The BCC Facility has one CT electric generator and one ST electric generator. The generator for the CT is a 60 Hz machine rated at approximately 17 MVA with an output voltage of 13.8 kV. The ST electric generator is a 60 Hz machine rated at approximately 10 MVA with an output voltage of 13.8 kV. The generator breakers for the CT and ST electric generators are bussed together in 15 kV class switchgear that is connected to a high-voltage transmission system at the facility switchyard via a circuit breaker, GSU, and a disconnect switch. The GSU increases the voltage from the electric generators from 13.8 kV to interconnected transmission system high voltage.

The BCC Facility is controlled using a DCS. The DCS provides centralized control of the facility by integrating the control systems provided with each individual CT and associated

electric generator, ST and associated electric generator, and the control of BOP systems and equipment.

13.3 OFF-SITE REQUIREMENTS

Biomass is delivered to the BCC Facility by rail, truck or barge. Water for all processes at the BCC Facility is obtained from one of several available water sources. The BCC Facility uses a water treatment system and a high-efficiency reverse osmosis system to reduce the dissolved solids from the cooling water and to provide distilled water for HRSG makeup. Wastewater is sent to a municipal wastewater system or other available wastewater delivery point. Further, the electrical interconnection from the BCC Facility on-site switchyard is effectuated by a connection to an adjacent utility substation.

13.4 CAPITAL COST ESTIMATE

The base Cost Estimate for the BCC Facility with a nominal capacity of 20 MW is $7,573/kW. Table 13-1 summarizes the Cost Estimate categories for the BCC Facility.

TABLE 13-1 – BASE PLANT SITE CAPITAL COST ESTIMATE FOR BCC

Technology:	**BCC**	
Nominal Capacity (ISO):	**20,000 kW**	
Nominal Heat Rate (ISO):	**12,350 Btu/kWh-HHV**	
Capital Cost Category		**(000s) (October 1, 2010$)**
Civil Structural Material and Installation		**16,459**
Mechanical Equipment Supply and Installation		**70,137**
Electrical / I&C Supply and Installation		**11,267**
Project Indirects (1)		**21,207**
EPC Cost before Contingency and Fee		**119,070**
Fee and Contingency		**12,500**
Total Project EPC		**131,570**
Owner Costs (excluding project finance)		**26,314**
Total Project Cost (excluding finance)		**157,884**
Total Project EPC	**/ kW**	**6,578**
Owner Costs 20% (excluding project finance)	**/ kW**	**1,316**
Total Project Cost (excluding project finance)	**/ kW**	**7,894**

(1) Includes engineering, distributable costs, scaffolding, construction management, and start-up.

For this type of technology and power plant configuration, our regional adjustments took into consideration the following: outdoor installation considerations, seismic design differences, remote location issues, labor wage and productivity differences, location adjustments, owner cost differences, and the increase in overheads associated with these six adjustments.

Outdoor installation locations are considered in geographic areas where enclosed structures for the boilers would not be required due to the low probability of freezing. The locations that included outdoor installation are Alabama, Arizona, Arkansas, Florida, Georgia, Hawaii, Louisiana, Mississippi, New Mexico, South Carolina, and Puerto Rico.

Seismic design differences among the various locations were based on U.S. seismic map information that detailed the various seismic zones throughout the U.S. No cost increases were associated with seismic Zone 0 and cost step increases were considered for Zones 1, 2, 3 and 4.

Remote location issues are related to geographic areas that typically require installation of man camps, higher craft incentives, and higher per diems are generally required with respect to construction, due to the fact that such areas are long distances from urban areas, where labor is generally abundant. Remote location designations were also considered in locations where higher equipment freight costs are typically incurred, which for example are regions not near established rail or highway access. Remote locations related to the BCC include Fairbanks, Alaska; Honolulu, Hawaii; Albuquerque, New Mexico; Cheyenne, Wyoming; and Cayey, Puerto Rico.

Labor wage and productivity differences were handled as discussed in Section 2.5.1, taking into consideration the amount of labor we estimated for the BCC Facility.

Location adjustments were made to locations where higher cost of living levels are incurred and/or where population density generally correlates to higher construction costs for power and other infrastructure projects. These locations include Alaska, California, Connecticut, Delaware, District of Columbia, Hawaii, Illinois, Maine, Maryland, Massachusetts, Michigan, Minnesota, New York, Ohio, and Wisconsin.

Owner costs were reviewed based on the need for utility upgrades and/or infrastructure costs such as new facility transmission lines to tie to existing utility transmission substations or existing transmission lines.

Table 13-2 presents the BCC Facility capital cost variations for alternative U.S. plant locations.

TABLE 13-2 – LOCATION-BASED COSTS FOR BCC
(OCTOBER 1, 2010 DOLLARS)

State	City	Base Project Cost ($/kW)	Location Percent Variation	Delta Cost Difference ($/kW)	Total Location Project Cost ($/kW)
Alaska	Anchorage	7,900	14.0%	1,104	9,004
Alaska	Fairbanks	7,900	15.2%	1,197	9,097
Alabama	Huntsville	7,900	-6.0%	(472)	7,428
Arizona	Phoenix	0	0.0%	0	0
Arkansas	Little Rock	7,900	-5.0%	(392)	7,508
California	Los Angeles	7,900	7.2%	566	8,466
California	Redding	7,900	3.3%	262	8,162
California	Bakersfield	7,900	3.0%	237	8,137
California	Sacramento	7,900	6.8%	539	8,439
California	San Francisco	7,900	19.6%	1,547	9,447
Colorado	Denver	7,900	-9.2%	(724)	7,176
Connecticut	Hartford	7,900	11.9%	940	8,840
Delaware	Dover	7,900	9.7%	768	8,668
District of Columbia	Washington	7,900	15.1%	1,196	9,096
Florida	Tallahassee	7,900	-8.0%	(635)	7,265
Florida	Tampa	7,900	-3.5%	(274)	7,626
Georgia	Atlanta	7,900	-6.5%	(511)	7,389
Hawaii	Honolulu	7,900	29.3%	2,311	10,211
Idaho	Boise	7,900	-3.9%	(304)	7,596
Illinois	Chicago	7,900	13.6%	1,073	8,973
Indiana	Indianapolis	7,900	0.4%	35	7,935
Iowa	Davenport	7,900	-1.2%	(93)	7,807
Iowa	Waterloo	7,900	-6.8%	(539)	7,361
Kansas	Wichita	7,900	-5.6%	(444)	7,456
Kentucky	Louisville	7,900	-4.7%	(375)	7,525
Louisiana	New Orleans	7,900	-8.3%	(653)	7,247
Maine	Portland	7,900	-3.0%	(236)	7,664
Maryland	Baltimore	7,900	0.1%	10	7,910
Massachusetts	Boston	7,900	18.5%	1,459	9,359
Michigan	Detroit	7,900	2.4%	188	8,088
Michigan	Grand Rapids	7,900	-5.9%	(469)	7,431
Minnesota	St. Paul	7,900	2.5%	200	8,100
Mississippi	Jackson	7,900	-5.9%	(469)	7,431
Missouri	St. Louis	7,900	2.8%	220	8,120
Missouri	Kansas City	7,900	1.5%	119	8,019
Montana	Great Falls	7,900	-4.8%	(379)	7,521
Nebraska	Omaha	7,900	-3.2%	(252)	7,648
New Hampshire	Concord	7,900	-2.3%	(182)	7,718
New Jersey	Newark	7,900	11.2%	882	8,782

State	City	Base Project Cost ($/kW)	Location Percent Variation	Delta Cost Difference ($/kW)	Total Location Project Cost ($/kW)
New Mexico	Albuquerque	0	0.0%	0	0
New York	New York	7,900	23.6%	1,866	9,766
New York	Syracuse	7,900	3.3%	259	8,159
Nevada	Las Vegas	0	0.0%	0	0
North Carolina	Charlotte	7,900	-8.3%	(658)	7,242
North Dakota	Bismarck	7,900	-6.0%	(476)	7,424
Ohio	Cincinnati	7,900	-1.7%	(134)	7,766
Oregon	Portland	7,900	3.1%	246	8,146
Pennsylvania	Philadelphia	7,900	8.1%	639	8,539
Pennsylvania	Wilkes-Barre	7,900	-3.7%	(293)	7,607
Rhode Island	Providence	7,900	2.1%	162	8,062
South Carolina	Spartanburg	7,900	-9.8%	(771)	7,129
South Dakota	Rapid City	7,900	-8.1%	(639)	7,261
Tennessee	Knoxville	7,900	-7.3%	(575)	7,325
Texas	Houston	7,900	-7.2%	(568)	7,332
Utah	Salt Lake City	0	0.0%	0	0
Vermont	Burlington	7,900	-5.1%	(400)	7,500
Virginia	Alexandria	7,900	2.5%	198	8,098
Virginia	Lynchburg	7,900	-3.4%	(271)	7,629
Washington	Seattle	7,900	5.6%	441	8,341
Washington	Spokane	7,900	-2.8%	(222)	7,678
West Virginia	Charleston	7,900	-1.9%	(149)	7,751
Wisconsin	Green Bay	7,900	-1.1%	(83)	7,817
Wyoming	Cheyenne	0	0.0%	0	0
Puerto Rico	Cayey	7,900	-3.7%	(290)	7,610

13.5 O&M ESTIMATE

In addition to the general items discussed in the section of this report entitled O&M Estimate, the BCC Facility include the major maintenance for the CT, as well as the BOP, including the ST, associated electric generator, HRSG, and emissions reduction catalysts. These major maintenance expenses are included with the VOM expense for this technology and are given on an average basis across the MWhs incurred. Typically, significant overhauls on a BCC Facility occur no less frequently than 8,000 operating hour intervals, with more significant major outages occurring on 24,000 hour intervals. Additionally, major maintenance needs to be completed on the gasifier, including the refractory, which due to the lower operating temperature (as compared to the IGCC Facility discussed above) only needs replacing approximately every 10 years. Table 13-3 presents the O&M expenses for the BCC Facility.

TABLE 13-3 – O&M EXPENSES FOR BCC

Technology:	BCC
Fixed O&M Expense	$338.79/kW-year
Variable O&M Expense	$16.64/MWh

13.6 ENVIRONMENTAL COMPLIANCE INFORMATION

The BCC Facility utilizes syngas combustors (which do not have DLN) in the CT and best available burner technology with respect to the duct burners in the HRSGs to manage the production of NO_X and CO. Additional control of NO_X and CO is accomplished through an SCR and an oxidization catalyst, respectively. SO_2 in the IGCC is managed through the use of low-sulfur biomass feedstocks. The BCC does not include any control devices for CO_2, which is proportional to the heat rate (inversely proportional to the efficiency) of the technology. Water, wastewater, and solid waste compliance are achieved through traditional on-site and off-site methods, and the costs for such compliance are included in the O&M Estimate for the BCC Facility. Table 13-4 presents environmental emissions for the BCC Facility.

TABLE 13-4 – ENVIRONMENTAL EMISSIONS FOR BCC

Technology:	BCC
NO_X	0.054 lb/MMBtu
SO_2	0 lb/MMBtu
CO_2	195 lb/MMBtu

14. BIOMASS BUBBLING FLUIDIZED BED (BBFB)

14.1 MECHANICAL EQUIPMENT AND SYSTEMS

The Biomass BFB ("BBFB") Facility utilizes approximately 2,000 tons per day of wood (at 50 percent maximum moisture) for the production of 50 MW net of electricity. The BBFB Facility consists of a BFB boiler, which will flow to the ST. Steam leaving the ST will be condensed to water in a shell and tube surface condenser. The water will be pumped from the "hotwell" of the condenser through a series of feedwater heaters for purposes of pre-heating the water with ST extraction steam. The combination of feedwater heating and waste heat flowing through the economizer is included to improve cycle efficiency. The water will enter the first feedwater heater where it will be heated using extraction steam from the ST. The water will then flow to the deaerating feedwater heater and into an electric-driven boiler feed pump where the pressure of the water will be increased to approximately 1,800 psia. After leaving the boiler feed pump, the water will flow through two more feedwater heaters. After exiting the last feedwater heater, the water will flow to the economizer section of the BFB boiler for delivery to the combustion section where it will be converted back to steam and the cycle will be repeated. The cooling tower is to be used to cool the circulating water that is used to condense the steam inside the condenser.

In a BFB boiler, a portion of air is introduced through the bottom of the combustor. The bottom of the bed is supported by refractory walls or water-cooled membrane with specially designed air nozzles which distribute the air uniformly. The fuel and limestone are fed into the lower bed. In the presence of fluidizing air, the fuel and limestone quickly and uniformly mix under the turbulent environment and behave like a fluid. Carbon particles in the fuel are exposed to the combustion air. The balance of combustion air is introduced at the top of the lower, dense bed. This staged combustion limits the formation of NO_X. The advantages of BFB boiler technology include fuel flexibility, low SO_2 emissions, low NO_X emissions, and high combustion efficiency.

FIGURE 14-1 – BCC DESIGN CONFIGURATION

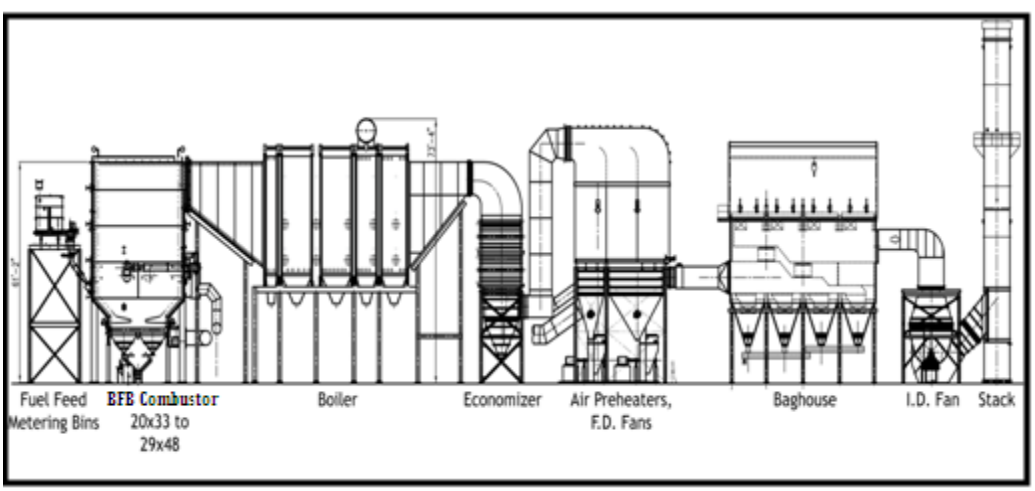

14.2 ELECTRICAL AND CONTROL SYSTEMS

The BBFB Facility has one ST electric generator. The generator for the ST is a 60 Hz machine rated at approximately 65 MVA with an output voltage of 13.8 kV. The generator breakers for the ST electric generator are bussed together in 15 kV class switchgear that is connected to a high-voltage transmission system at the facility switchyard via a circuit breaker, GSU, and a disconnect switch. The GSU increases the voltage from the electric generators from 13.8 kV to interconnected transmission system high voltage.

The BBFB Facility is controlled using a DCS. The DCS provides centralized control of the facility by integrating the control systems provided with the ST and associated electric generator and the control of BOP systems and equipment.

14.3 OFF-SITE REQUIREMENTS

Biomass is delivered to the BBFB Facility by rail, truck or barge. Water for all processes at the BBFB Facility is obtained from one of several available water sources. The BBFB Facility uses a water treatment system and a high-efficiency reverse osmosis system to reduce the dissolved solids from the cooling water and to provide distilled water for HRSG makeup. Wastewater is sent to a municipal wastewater system or other available wastewater delivery point. Further, the electrical interconnection from the BBFB Facility on-site switchyard is effectuated by a connection to an adjacent utility substation.

14.4 CAPITAL COST ESTIMATE

The base Cost Estimate for the BBFB Facility with a nominal capacity of 50 MW is $3,860/kW. Table 14-1 summarizes the Cost Estimate categories for the BBFB Facility.

TABLE 14-1 – BASE PLANT SITE CAPITAL COST ESTIMATE FOR BBFB

Technology:	BBFB
Nominal Capacity (ISO):	50,000 kW
Nominal Heat Rate (ISO):	13,500 Btu/kWh-HHV

Capital Cost Category		(000s) (October 1, 2010$)
Civil Structural Material and Installation		13,650
Mechanical Equipment Supply and Installation		67,200
Electrical / I&C Supply and Installation		20,000
Project Indirects (1)		40,250
EPC Cost before Contingency and Fee		141,100
Fee and Contingency		19,754
Total Project EPC		160,854
Owner Costs (excluding project finance)		32,171
Total Project Cost (excluding finance)		193,025
Total Project EPC	/ kW	3,217
Owner Costs 20% (excluding project finance)	/ kW	643
Total Project Cost (excluding project finance)	/ kW	3,860

(1) Includes engineering, distributable costs, scaffolding, construction management, and start-up.

For this type of technology and power plant configuration, our regional adjustments took into consideration the following: outdoor installation considerations, seismic design differences, remote location issues, labor wage and productivity differences, location adjustments, owner cost differences, and the increase in overheads associated with these six adjustments.

Outdoor installation locations are considered in geographic areas where enclosed structures for the boilers would not be required due to the low probability of freezing. The locations that included outdoor installation are Alabama, Arizona, Arkansas, Florida, Georgia, Hawaii, Louisiana, Mississippi, New Mexico, South Carolina, and Puerto Rico.

Seismic design differences among the various locations were based on U.S. seismic map information that detailed the various seismic zones throughout the U.S. No cost increases were associated with seismic Zone 0 and cost step increases were considered for Zones 1, 2, 3 and 4.

Remote location issues are related to geographic areas that typically require installation of man camps, higher craft incentives, and higher per diems are generally required with respect to construction, due to the fact that such areas are long distances from urban areas, where labor is generally abundant. Remote location designations were also considered in locations where higher equipment freight costs are typically incurred, which for example are regions not near established rail or highway access. Remote locations related to the BCC include Fairbanks, Alaska; Honolulu, Hawaii; Albuquerque, New Mexico; Cheyenne, Wyoming; and Cayey, Puerto Rico.

Labor wage and productivity differences were handled as discussed in Section 2.5.1, taking into consideration the amount of labor we estimated for the BCC Facility.

Location adjustments were made to locations where higher cost of living levels are incurred and/or where population density generally correlates to higher construction costs for power and other infrastructure projects. These locations include Alaska, California, Connecticut, Delaware, District of Columbia, Hawaii, Illinois, Maine, Maryland, Massachusetts, Michigan, Minnesota, New York, Ohio, and Wisconsin.

Owner costs were reviewed based on the need for utility upgrades and/or infrastructure costs such as new facility transmission lines to tie to existing utility transmission substations or existing transmission lines.

Table 14-2 presents the BBFB Facility capital cost variations for alternative U.S. plant locations.

TABLE 14-2– LOCATION-BASED COSTS FOR BBFB
(OCTOBER 1, 2010 DOLLARS)

State	City	Base Project Cost ($/kW)	Location Percent Variation	Delta Cost Difference ($/kW)	Total Location Project Cost ($/kW)
Alaska	Anchorage	3,860	25.8%	995	4,855
Alaska	Fairbanks	3,860	27.9%	1,076	4,936
Alabama	Huntsville	3,860	-9.7%	(376)	3,484
Arizona	Phoenix	0	0.0%	0	0
Arkansas	Little Rock	3,860	-8.1%	(311)	3,549
California	Los Angeles	3,860	13.4%	516	4,376
California	Redding	3,860	6.3%	242	4,102
California	Bakersfield	3,860	5.7%	221	4,081
California	Sacramento	3,860	11.9%	460	4,320
California	San Francisco	3,860	35.6%	1,373	5,233
Colorado	Denver	3,860	-8.2%	(318)	3,542
Connecticut	Hartford	3,860	22.9%	882	4,742
Delaware	Dover	3,860	19.3%	745	4,605
District of Columbia	Washington	3,860	31.6%	1,219	5,079
Florida	Tallahassee	3,860	-13.1%	(506)	3,354
Florida	Tampa	3,860	-5.7%	(221)	3,639
Georgia	Atlanta	3,860	-10.5%	(407)	3,453
Hawaii	Honolulu	3,860	58.2%	2,248	6,108
Idaho	Boise	3,860	-6.2%	(238)	3,622
Illinois	Chicago	3,860	22.7%	875	4,735
Indiana	Indianapolis	3,860	1.5%	56	3,916
Iowa	Davenport	3,860	-1.9%	(74)	3,786
Iowa	Waterloo	3,860	-11.0%	(426)	3,434
Kansas	Wichita	3,860	-9.1%	(350)	3,510
Kentucky	Louisville	3,860	-7.6%	(295)	3,565
Louisiana	New Orleans	3,860	-13.5%	(520)	3,340
Maine	Portland	3,860	-4.0%	(156)	3,704
Maryland	Baltimore	3,860	1.6%	63	3,923
Massachusetts	Boston	3,860	33.5%	1,292	5,152
Michigan	Detroit	3,860	3.9%	150	4,010
Michigan	Grand Rapids	3,860	-9.6%	(371)	3,489
Minnesota	St. Paul	3,860	4.3%	166	4,026
Mississippi	Jackson	3,860	-9.7%	(373)	3,487
Missouri	St. Louis	3,860	4.7%	181	4,041
Missouri	Kansas City	3,860	2.5%	96	3,956
Montana	Great Falls	3,860	-4.8%	(185)	3,675
Nebraska	Omaha	3,860	-5.1%	(198)	3,662
New Hampshire	Concord	3,860	-3.6%	(141)	3,719
New Jersey	Newark	3,860	18.1%	698	4,558

State	City	Base Project Cost ($/kW)	Location Percent Variation	Delta Cost Difference ($/kW)	Total Location Project Cost ($/kW)
New Mexico	Albuquerque	0	0.0%	0	0
New York	New York	3,860	38.3%	1,477	5,337
New York	Syracuse	3,860	7.5%	288	4,148
Nevada	Las Vegas	0	0.0%	0	0
North Carolina	Charlotte	3,860	-13.4%	(517)	3,343
North Dakota	Bismarck	3,860	-9.7%	(376)	3,484
Ohio	Cincinnati	3,860	-2.0%	(77)	3,783
Oregon	Portland	3,860	5.9%	228	4,088
Pennsylvania	Philadelphia	3,860	13.1%	507	4,367
Pennsylvania	Wilkes-Barre	3,860	-5.9%	(229)	3,631
Rhode Island	Providence	3,860	3.4%	131	3,991
South Carolina	Spartanburg	3,860	-15.8%	(611)	3,249
South Dakota	Rapid City	3,860	-13.1%	(505)	3,355
Tennessee	Knoxville	3,860	-11.7%	(453)	3,407
Texas	Houston	3,860	-11.6%	(449)	3,411
Utah	Salt Lake City	0	0.0%	0	0
Vermont	Burlington	3,860	-8.1%	(314)	3,546
Virginia	Alexandria	3,860	6.2%	240	4,100
Virginia	Lynchburg	3,860	-4.8%	(186)	3,674
Washington	Seattle	3,860	9.9%	382	4,242
Washington	Spokane	3,860	-4.5%	(172)	3,688
West Virginia	Charleston	3,860	-3.0%	(117)	3,743
Wisconsin	Green Bay	3,860	-1.0%	(39)	3,821
Wyoming	Cheyenne	0	0.0%	0	0
Puerto Rico	Cayey	3,860	-5.5%	(213)	3,647

14.5 O&M ESTIMATE

In addition to the general items discussed in the section of this report entitled O&M Estimate, the BBFB Facility includes the major maintenance for the ST and associated electric generator, as well as the BOP. These major maintenance expenses are included with the VOM expense for this technology and are given on an average basis across the MWhs incurred. Typically, significant overhauls on a BBFB Facility occur no less frequently than 6 to 8 years. Table 14-3 presents the O&M expenses for the BBFB Facility.

TABLE 14-3 – O&M EXPENSES FOR BCC

Technology:	BCC
Fixed O&M Expense	$100.50/kW-year
Variable O&M Expense	$5.0/MWh

14.6 ENVIRONMENTAL COMPLIANCE INFORMATION

The BBFB Facility utilizes BFB combustion to control NO_X and CO. SO_2 in the BFB is managed through the use of low-sulfur biomass feedstocks. The BBFB Facility does not include any control devices for CO_2, which is proportional to the heat rate (inversely proportional to the efficiency) of the technology. Water, wastewater, and solid waste compliance are achieved through traditional on-site and off-site methods, and the costs for such compliance are included in the O&M Estimate for the BBFB Facility. Table 14-4 presents environmental emissions for the BBFB Facility.

TABLE 14-4 – ENVIRONMENTAL EMISSIONS FOR BBFB

Technology:	BBFB
NO_X	0.08 lb/MMBtu
SO_2	0 lb/MMBtu
CO_2	195 lb/MMBtu

15. FUEL CELL (FC) MECHANICAL EQUIPMENT AND SYSTEMS

The Fuel Cell ("FC") Facility utilizes multiple phosphoric acid fuel cell units, each with a power output of 400 kW, for a total output of 10 MW. The fuel cells convert chemical energy directly into electricity from natural gas and air vapor and produce heat and water vapor as byproducts. The fuel (the reactant) is introduced continuously to the anode side of the unit cell while air (the oxidant) is introduced continuously into the cathode side via a blower. In a fuel cell, electricity is produced by ionic transfer across an electrolyte that separates the fuel from the air. A high temperature fuel cell produces electricity by splitting a molecule of the oxidant into its ionic components at the cathode, passing ions through the electrolyte (e.g. in the case of the FC Facility, a phosphoric acid ion) and then reacting the ions with the fuel at the anode to produce heat to allow the reaction to occur. During this ionic transfer process, two electrons are stripped from each ion to which develops a voltage and current. Since each fuel cell develops a relatively low voltage, the cells are stacked to produce a higher, more useful voltage. Depending on the type of fuel cell, high temperature waste heat from the process may be available for cogeneration applications. Figure 15-1 presents the fuel cell process flow diagram.

FIGURE 15-1 – FC DESIGN CONFIGURATION

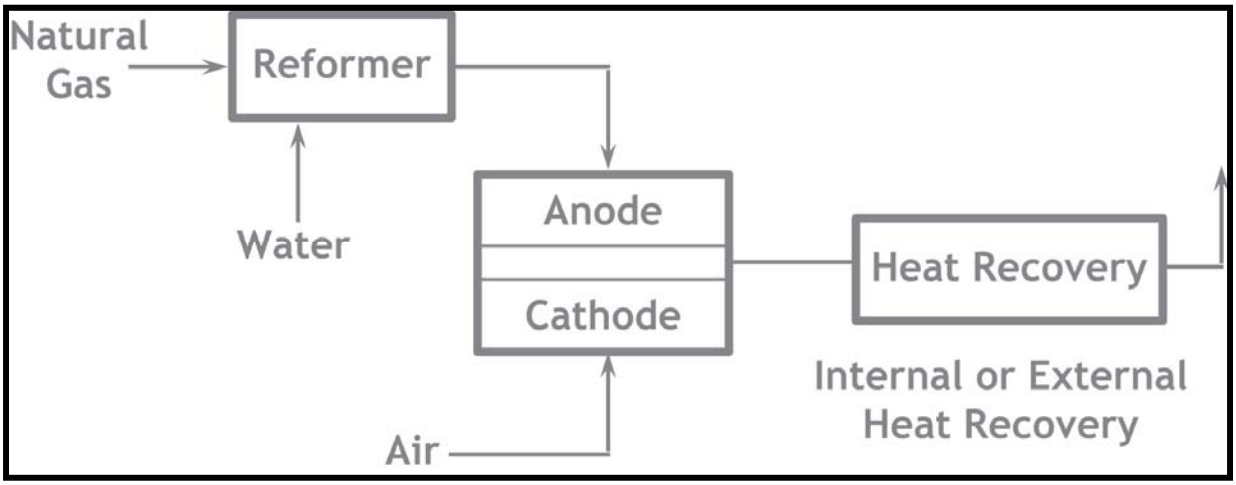

15.1 ELECTRICAL AND CONTROL SYSTEMS

Each fuel cell stack generates DC electric power. These stacks are connected to DC-to-AC inverters that produce an output of 60 Hz, three-phase 480 volt ("V") AC electric power voltage. The inverters also provide power quality control and protection when designed to IEEE Standards. The fuel cell units are connected through circuit breakers to a switchgear bus that combines the output of the fuel cell units for a total output of 10 MW. The switchgear is connected through a circuit breaker to the local utility distribution system.

Each individual fuel cell module has its own autonomous control system with an overall data acquisition system for the combined FC Facility.

15.2 OFF-SITE REQUIREMENTS

Natural gas is delivered to the FC Facility through a lateral or in an urban environment, potentially through the local distribution company infrastructure. Water for all processes at the FC Facility is obtained from one of several available water sources, but given that the water

needs are low, a municipal (potable) water source would be preferable. Wastewater is sent to a municipal wastewater system. Further, the electrical interconnection from the FC Facility is into the local grid distribution infrastructure.

15.3 CAPITAL COST ESTIMATE

The base Cost Estimate for the FC Facility with a nominal capacity of 10 MW is $9,960/kW. Table 15-1 summarizes the Cost Estimate categories for the FC Facility.

TABLE 15-1 – BASE PLANT SITE CAPITAL COST ESTIMATE FOR FC

Technology:	**FC**	
Nominal Capacity (ISO):	**10,000 kW**	
Nominal Heat Rate (ISO):	**9,500 Btu/kWh-HHV**	
Capital Cost Category		**(000s) (October 1, 2010$)**
Civil Structural Material and Installation		**3,148**
Mechanical Equipment Supply and Installation		**49,925**
Electrical / I&C Supply and Installation		**2,050**
Project Indirects (1)		**3,473**
EPC Cost before Contingency and Fee		**58,596**
Fee and Contingency		**4,688**
Total Project EPC		**63,284**
Owner Costs (excluding project finance)		**5,063**
Total Project Cost (excluding finance)		**68,347**
Total Project EPC	**/ kW**	**6,328**
Owner Costs 8% (excluding project finance)	**/ kW**	**500**
Total Project Cost (excluding project finance)	**/ kW**	**6,835**

(1) Includes engineering, distributable costs, scaffolding, construction management, and start-up.

For this type of technology and power plant configuration, our regional adjustments took into consideration the following: seismic design differences, remote location issues, labor wage and productivity differences, location adjustments, owner cost differences, and the increase in overheads associated with these five adjustments.

Seismic design differences among the various locations were based on U.S. seismic map information that detailed the various seismic zones throughout the U.S. No cost increases were associated with seismic Zone 0 and cost step increases were considered for Zones 1, 2, 3 and 4.

Remote location issues are related to geographic areas that typically require installation of man camps, higher craft incentives, and higher per diems are generally required with respect to construction, due to the fact that such areas are long distances from urban areas, where labor is generally abundant. Remote location designations were also considered in locations where higher equipment freight costs are typically incurred, which for example are regions not near established rail or highway access. Remote locations related to the FC Facility include Fairbanks, Alaska; Honolulu, Hawaii; Albuquerque, New Mexico; Cheyenne, Wyoming; and Cayey, Puerto Rico.

Labor wage and productivity differences were handled as discussed in Section 2.5.1, taking into consideration the amount of labor we estimated for the FC Facility.

Location adjustments were made to locations where higher cost of living levels are incurred and/or where population density generally correlates to higher construction costs for power and other infrastructure projects. These locations include Alaska, California, Connecticut, Delaware, District of Columbia, Hawaii, Illinois, Maine, Maryland, Massachusetts, Michigan, Minnesota, New York, Ohio, and Wisconsin.

Owner costs were reviewed based on the need for utility upgrades and/or infrastructure costs such as new facility transmission lines to tie to existing utility transmission substations or existing transmission lines.

Table 15-2 presents the FC Facility capital cost variations for alternative U.S. plant locations.

TABLE 15-2 – LOCATION-BASED COSTS FOR FC
(OCTOBER 1, 2010 DOLLARS)

State	City	Base Project Cost ($/kW)	Location Percent Variation	Delta Cost Difference ($/kW)	Total Location Project Cost ($/kW)
Alaska	Anchorage	6,835	12.7%	871	7,706
Alaska	Fairbanks	6,835	18.4%	1,255	8,090
Alabama	Huntsville	6,835	-4.6%	(312)	6,523
Arizona	Phoenix	6,835	-3.5%	(240)	6,595
Arkansas	Little Rock	6,835	-3.7%	(251)	6,584
California	Los Angeles	6,835	4.3%	293	7,128
California	Redding	6,835	1.7%	119	6,954
California	Bakersfield	6,835	2.2%	150	6,985
California	Sacramento	6,835	4.6%	313	7,148
California	San Francisco	6,835	10.7%	733	7,568
Colorado	Denver	6,835	-4.1%	(278)	6,557
Connecticut	Hartford	6,835	4.4%	299	7,134
Delaware	Dover	6,835	2.4%	166	7,001
District of Columbia	Washington	6,835	1.9%	127	6,962
Florida	Tallahassee	6,835	-6.3%	(432)	6,403
Florida	Tampa	6,835	-2.6%	(179)	6,656
Georgia	Atlanta	6,835	-5.0%	(340)	6,495
Hawaii	Honolulu	6,835	12.0%	817	7,652
Idaho	Boise	6,835	-3.0%	(203)	6,632
Illinois	Chicago	6,835	10.0%	681	7,516
Indiana	Indianapolis	6,835	-0.6%	(42)	6,793
Iowa	Davenport	6,835	-1.0%	(65)	6,770
Iowa	Waterloo	6,835	-5.5%	(378)	6,457
Kansas	Wichita	6,835	-4.5%	(306)	6,529
Kentucky	Louisville	6,835	-3.8%	(258)	6,577
Louisiana	New Orleans	6,835	-6.5%	(445)	6,390
Maine	Portland	6,835	-2.4%	(162)	6,673
Maryland	Baltimore	6,835	-1.3%	(86)	6,749
Massachusetts	Boston	6,835	9.7%	662	7,497
Michigan	Detroit	6,835	2.3%	156	6,991
Michigan	Grand Rapids	6,835	-4.5%	(310)	6,525
Minnesota	St. Paul	6,835	1.9%	133	6,968
Mississippi	Jackson	6,835	-4.5%	(310)	6,525
Missouri	St. Louis	6,835	2.6%	180	7,015
Missouri	Kansas City	6,835	1.4%	94	6,929
Montana	Great Falls	6,835	-3.1%	(209)	6,626
Nebraska	Omaha	6,835	-2.5%	(172)	6,663
New Hampshire	Concord	6,835	-1.4%	(98)	6,737
New Jersey	Newark	6,835	10.1%	689	7,524

State	City	Base Project Cost ($/kW)	Location Percent Variation	Delta Cost Difference ($/kW)	Total Location Project Cost ($/kW)
New Mexico	Albuquerque	6,835	-2.8%	(194)	6,641
New York	New York	6,835	22.2%	1,514	8,349
New York	Syracuse	6,835	-0.7%	(48)	6,787
Nevada	Las Vegas	6,835	3.7%	253	7,088
North Carolina	Charlotte	6,835	-6.6%	(451)	6,384
North Dakota	Bismarck	6,835	-4.6%	(314)	6,521
Ohio	Cincinnati	6,835	-2.6%	(180)	6,655
Oregon	Portland	6,835	1.6%	107	6,942
Pennsylvania	Philadelphia	6,835	6.7%	459	7,294
Pennsylvania	Wilkes-Barre	6,835	-2.9%	(195)	6,640
Rhode Island	Providence	6,835	1.8%	124	6,959
South Carolina	Spartanburg	6,835	-7.6%	(517)	6,318
South Dakota	Rapid City	6,835	-6.3%	(429)	6,406
Tennessee	Knoxville	6,835	-5.8%	(398)	6,437
Texas	Houston	6,835	-5.8%	(398)	6,437
Utah	Salt Lake City	6,835	-3.7%	(251)	6,584
Vermont	Burlington	6,835	-3.7%	(251)	6,584
Virginia	Alexandria	6,835	-0.8%	(52)	6,783
Virginia	Lynchburg	6,835	-4.0%	(276)	6,559
Washington	Seattle	6,835	3.6%	244	7,079
Washington	Spokane	6,835	-1.8%	(126)	6,709
West Virginia	Charleston	6,835	-1.2%	(80)	6,755
Wisconsin	Green Bay	6,835	-1.9%	(130)	6,705
Wyoming	Cheyenne	6,835	-3.6%	(245)	6,590
Puerto Rico	Cayey	6,835	-0.2%	(14)	6,821

15.4 O&M ESTIMATE

In addition to the general items discussed in the section of this report entitled O&M Estimate, since a FC is a direct energy conversion device, the specific O&M related to the FC Facility that differs from other facilities discussed in this report is the stack replacement, currently anticipated to be every five years by the various vendors and developers. Table 15-3 presents the O&M expenses for the FC Facility.

TABLE 15-3 – O&M EXPENSES FOR FC

Technology:	FC
Fixed O&M Expense	$350/kW-year
Variable O&M Expense	$0/MWh

15.5 ENVIRONMENTAL COMPLIANCE INFORMATION

Table 15-4 presents environmental emissions for the FC Facility. It should be noted that the CO_2 production from the FC Facility occurs as a result of reforming natural gas to the feedstock for the fuel cell module.

TABLE 15-4 – ENVIRONMENTAL EMISSIONS FOR FC

Technology:	FC
NO_X	<0.013 lb/MMBtu
SO_2	<0.00013 lb/MMBtu
CO_2	<130 lb/MMBtu

16. GEOTHERMAL DUAL FLASH (GT)

16.1 MECHANICAL EQUIPMENT AND SYSTEMS

The Geothermal ("GT") Facility produces 50 MW net of electricity. The facility uses a dual-flash GT cycle, which includes one ST with the capability to generate 55 gross MW based on a high-temperature, high-salinity brine. The GT Facility consists of production wells, a Turbine Generating Facility ("TGF"), a Brine Processing Facility ("BPF"), injection wells, and a plant injection well. GT fluid in mixed phase (steam and brine) from the production wells is piped to the BPF where the fluid is flashed at successively lower pressures to produce three separate pressure levels of steam to be delivered to the TGF. Additionally, the BPF will produce a concentrated brine to be further processed to remove solids.

The GT production wells deliver the GT brine to the BPF where it is initially flashed in a separator drum to produce HP steam. The remaining brine is subject to two additional pressure reduction stages, in closed pressure vessels called crystallizers, which are operated in a manner to prevent the rapid scaling of the vessel walls and internal parts by the precipitation of solids from the brine. The medium-pressure crystallizer is supplied with a small quantity of seed flow, concentrated brine from the primary clarifier, to provide a nucleus to which the solids in the crystallizer brine can attach themselves and be carried out with the brine leaving the crystallizer. The separated brine from the crystallizers is sent through an atmospheric flash tank to reduce pressure, and then further processed via a primary and secondary clarifier system where the solids produced are formed into a solid cake after being passed through a filter press, treated with acid and neutralizing washes, and steam and hot-air dried to produce a silica rich filter cake

Steam at the three pressure levels from the BPF is delivered to the TGF and directed through steam scrubbers (one for each pressure level), which are designed to produce 99.95 percent quality steam, by removing free liquids and a proportion of the entrained liquids within the steam. The scrubbed steam is delivered to the ST. The ST is a condensing ST equipped with dual HP, IP, and LP inlets. Steam from the ST is condensed in a two-pass shell and tube condenser constructed of stainless steel, with part of the condensate used for cooling tower make-up, and the remainder pumped to the re-injection wells. Condensate pumps direct condensate to the circulating water system, the purge system, or the condensate injection system. The non-condensable gases are evacuated by a non-condensable gas removal system and vent products delivered to an H_2S abatement system. Cooling water for the ST condenser is supplied by an induced-draft cooling tower. Circulating water pumps direct water from the cooling tower to the ST condenser. Make-up water for the cycle is supplied from the condensate from the ST condenser. Additional make-up water may be needed during the summer months. Figure 16-1 presents a simplified process flow diagram for a GT power plant configuration.

FIGURE 16-1 – GT DESIGN CONFIGURATION

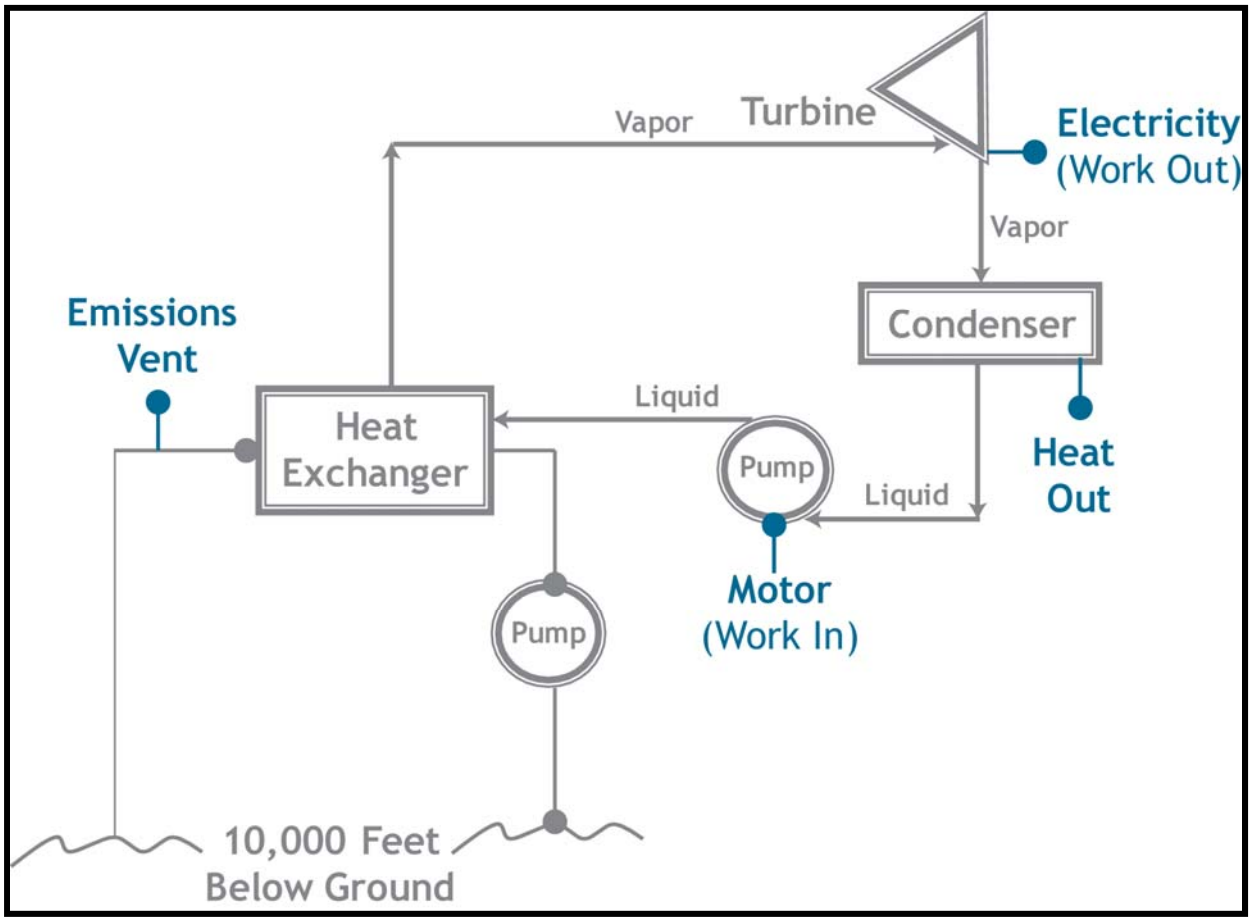

16.2 ELECTRICAL AND CONTROL SYSTEMS

The GT Facility has one ST electric generator. The generator is a 60 Hz machine rated at approximately 70 MVA with an output voltage of 13.8 kV. The ST electric generator is connected to a high-voltage bus in the facility switchyard via a dedicated generator circuit breaker, GSU, high-voltage circuit breaker and a disconnect switch. The GSU increases the voltage from the electric generator from 13.8 kV to interconnected transmission system high voltage.

The GT Facility is controlled using a DCS. The DCS provides centralized control of the facility by integrating the control systems provided with the BPF, ST and associated electric generator, and the control of BOP systems and equipment.

16.3 OFF-SITE REQUIREMENTS

Since the GT Facility is fueled by a renewable, underground fuel source, an off-site fuel source, other than incidental plant heating, is not required. Water for all processes at the GT Facility is obtained from one of several available water sources; however, due to the geography of most geothermal power plants, water is sourced from on-site wells. Processed wastewater is generally re-injected, if wells are the source of water, though many GT facilities utilize ZLD. Further, the

electrical interconnection from the GT Facility is accomplished by interconnecting via the plant switchyard into the utility high-voltage transmission system.

16.4 CAPITAL COST ESTIMATE

The base Cost Estimate for the GT Facility with a nominal capacity of 50 MW is $6,163/kW. Table 16-1 summarizes the Cost Estimate categories for the GT Facility.

TABLE 16-1 – BASE PLANT SITE CAPITAL COST ESTIMATE FOR GT

Technology:	GT	
Nominal Capacity (ISO):	50,000 kW	
Nominal Heat Rate (ISO):	N/A Btu/kWh-HHV	
Capital Cost Category		**(000s) (October 1, 2010$)**
Civil Structural Material and Installation		9,450
Mechanical Equipment Supply and Installation (and well costs)		152,000
Electrical / I&C Supply and Installation		12,062
Project Indirects (1)		32,000
EPC Cost before Contingency and Fee		205,512
Fee and Contingency		30,827
Total Project EPC		236,339
Owner Costs (excluding project finance)		42,541
Total Project Cost (excluding finance)		278,880
Total Project EPC	/ kW	4,726
Owner Costs 18% (excluding project finance)	/ kW	852
Total Project Cost (excluding project finance)	/ kW	5,578

(1) Includes engineering, distributable costs, scaffolding, construction management, and start-up.

For this type of technology and power plant configuration, our regional adjustments took into consideration the following: seismic design differences, local technical enhancements (e.g., additional noise remediation that is generally required in urban siting), remote location issues, labor wage and productivity differences, location adjustments, and the increase in overheads associated with these five adjustments. It was assumed that geothermal facilities would only be considered in 13 states: Alaska, Arizona, California, Colorado, Florida, Hawaii, Idaho, Nevada, New Mexico, Oregon, Utah, Washington, and Wyoming.

Seismic design differences among the various locations were based on U.S. seismic map information that detailed the various seismic zones throughout the U.S. No cost increases were associated with seismic Zone 0 and cost step increases were considered for Zones 1, 2, 3 and 4.

Remote location issues are related to geographic areas that typically require installation of man camps, higher craft incentives, and higher per diems are generally required with respect to construction, due to the fact that such areas are long distances from urban areas, where labor is generally abundant. Remote location designations were also considered in locations where higher equipment freight costs are typically incurred, which for example are regions not near established rail or highway access. Remote locations related to the Geothermal Facility include Fairbanks, Alaska; Honolulu, Hawaii; Albuquerque, New Mexico; and Cheyenne, Wyoming.

Labor wage and productivity differences were handled as discussed in Section 2.5.1, taking into consideration the amount of labor we estimated for the GT Facility.

Location adjustments were made to locations where higher cost of living levels are incurred and/or where population density generally correlates to higher construction costs for power and other infrastructure projects. These locations include Alaska, California, Hawaii, and Wyoming.

Table 16-2 presents the GT Facility capital cost variations for alternative U.S. plant locations.

TABLE 16-2 – LOCATION-BASED COSTS FOR GT
(OCTOBER 1, 2010 DOLLARS)

State	City	Base Project Cost ($/kW)	Location Percent Variation	Delta Cost Difference ($/kW)	Total Location Project Cost ($/kW)
Alaska	Anchorage	5,580	13.9%	777	6,357
Alaska	Fairbanks	5,580	20.6%	1,150	6,730
Alabama	Huntsville	0	0.0%	0	0
Arizona	Phoenix	5,580	-3.1%	(173)	5,407
Arkansas	Little Rock	0	0.0%	0	0
California	Los Angeles	5,580	5.4%	301	5,881
California	Redding	5,580	1.8%	101	5,681
California	Bakersfield	5,580	2.4%	136	5,716
California	Sacramento	5,580	4.9%	271	5,851
California	San Francisco	5,580	11.8%	661	6,241
Colorado	Denver	5,580	-3.0%	(165)	5,415
Connecticut	Hartford	0	0.0%	0	0
Delaware	Dover	0	0.0%	0	0
District of Columbia	Washington	0	0.0%	0	0
Florida	Tallahassee	0	0.0%	0	0
Florida	Tampa	0	0.0%	0	0
Georgia	Atlanta	0	0.0%	0	0
Hawaii	Honolulu	5,580	21.8%	1,217	6,797
Idaho	Boise	5,580	-2.6%	(146)	5,434
Illinois	Chicago	0	0.0%	0	0
Indiana	Indianapolis	0	0.0%	0	0
Iowa	Davenport	0	0.0%	0	0
Iowa	Waterloo	0	0.0%	0	0
Kansas	Wichita	0	0.0%	0	0
Kentucky	Louisville	0	0.0%	0	0
Louisiana	New Orleans	0	0.0%	0	0
Maine	Portland	0	0.0%	0	0
Maryland	Baltimore	0	0.0%	0	0
Massachusetts	Boston	0	0.0%	0	0
Michigan	Detroit	0	0.0%	0	0
Michigan	Grand Rapids	0	0.0%	0	0
Minnesota	St. Paul	0	0.0%	0	0
Mississippi	Jackson	0	0.0%	0	0
Missouri	St. Louis	0	0.0%	0	0
Missouri	Kansas City	0	0.0%	0	0
Montana	Great Falls	0	0.0%	0	0
Nebraska	Omaha	0	0.0%	0	0
New Hampshire	Concord	0	0.0%	0	0
New Jersey	Newark	0	0.0%	0	0

State	City	Base Project Cost ($/kW)	Location Percent Variation	Delta Cost Difference ($/kW)	Total Location Project Cost ($/kW)
New Mexico	Albuquerque	5,580	-2.1%	(117)	5,463
New York	New York	0	0.0%	0	0
New York	Syracuse	0	0.0%	0	0
Nevada	Las Vegas	5,580	3.5%	193	5,773
North Carolina	Charlotte	0	0.0%	0	0
North Dakota	Bismarck	0	0.0%	0	0
Ohio	Cincinnati	0	0.0%	0	0
Oregon	Portland	5,580	1.7%	92	5,672
Pennsylvania	Philadelphia	0	0.0%	0	0
Pennsylvania	Wilkes-Barre	0	0.0%	0	0
Rhode Island	Providence	0	0.0%	0	0
South Carolina	Spartanburg	0	0.0%	0	0
South Dakota	Rapid City	0	0.0%	0	0
Tennessee	Knoxville	0	0.0%	0	0
Texas	Houston	0	0.0%	0	0
Utah	Salt Lake City	5,580	-3.1%	(173)	5,407
Vermont	Burlington	0	0.0%	0	0
Virginia	Alexandria	0	0.0%	0	0
Virginia	Lynchburg	0	0.0%	0	0
Washington	Seattle	5,580	3.5%	194	5,774
Washington	Spokane	5,580	-1.8%	(103)	5,477
West Virginia	Charleston	0	0.0%	0	0
Wisconsin	Green Bay	0	0.0%	0	0
Wyoming	Cheyenne	5,580	-2.9%	(164)	5,416
Puerto Rico	Cayey	0	0.0%	0	0

16.5 O&M ESTIMATE

In addition to the general items discussed in the section of this report entitled O&M Estimate, the GT Facility includes major maintenance on the ST, electric generator (each approximately every six years) and well field maintenance, which can vary depending on the GT resource. Table 16-3 presents the FOM and VOM expenses for the GT Facility.

TABLE 16-3 – O&M EXPENSES FOR GT

Technology:	GT
Fixed O&M Expense	$84.27/kW-year
Variable O&M Expense	$9.46/MWh

16.6 ENVIRONMENTAL COMPLIANCE INFORMATION

Table 16-4 presents environmental emissions for the GT Facility.

TABLE 16-4 – ENVIRONMENTAL EMISSIONS FOR GT

Technology:	GT
NO_X	0 per MWh
SO_2	0.2 per MWh
CO_2	120 per MWh

17. GEOTHERMAL BINARY (BINARY)

17.1 MECHANICAL EQUIPMENT AND SYSTEMS

The Geothermal Binary ("Binary") Facility produces 50 MW net of electricity. The Binary Facility consists primarily of three heat recovery systems. These heat recovery systems operate on a closed looped organic supercritical Rankine cycle using geothermal brine as a heat source, with a brine temperature approximately 275°F. Cycle heat rejection will be provided through three cooling towers. After supplying the three heat recovery systems with hot water, the geothermal brine will be re-injected into the resource at approximately 140°F through injection wells.

The heat recovery systems are equipped with a multistage, radial inflow turbo-expander generator unit. The turbo-expander is designed for a supercritical refrigerant inlet pressure and temperature. Each turbo-expander unit has a design output (gross) of approximately 10,000 kW.

Refrigerant is pumped from the condenser to the evaporators in each heat recovery system by means of a single high pressure vertical turbine pump.

FIGURE 17-1 – GT DESIGN CONFIGURATION

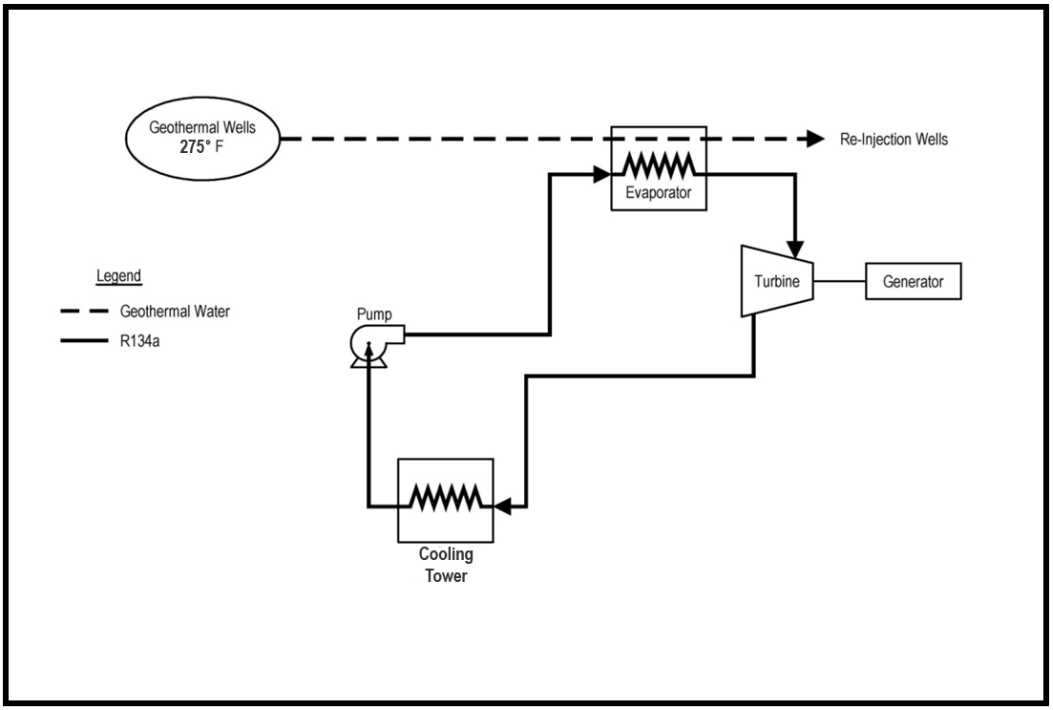

17.2 ELECTRICAL AND CONTROL SYSTEMS

There are to be three turbine generators at the Binary Facility. Each turbine generator is to be an air cooled unit with static excitation designed for operation at 60 Hz, three-phase and 12.5 kV. Each turbine generator is to be rated for 18 MW with a power factor range of 0.85 lagging.

The three turbine generators are to be connected to a single GSU connected through a generator circuit breaker and a switchgear main circuit breaker and underground cable to a switch on a common open air bus in the Binary Facility substation.

17.3 OFF-SITE REQUIREMENTS

Since the Binary Facility is fueled by a renewable, underground fuel source, an off-site fuel source, other than incidental plant heating is not required. Water for all processes at the Binary Facility is obtained from one of several available water sources; however, due to the geography of most geothermal power plants, water is sourced from on-site wells. Processed wastewater is generally re-injected, if wells are the source of water, though many Binary facilities utilize ZLD. Further, the electrical interconnection from the Binary Facility is accomplished by interconnecting via the plant switchyard into the utility high-voltage transmission system.

17.4 CAPITAL COST ESTIMATE

The base Cost Estimate for the Binary Facility with a nominal capacity of 50 MW is $4,141/kW. Table 17-1 summarizes the Cost Estimate categories for the Binary Facility.

TABLE 17-1 – BASE PLANT SITE CAPITAL COST ESTIMATE FOR GT

Technology:	**GT**	
Nominal Capacity (ISO):	**50,000 kW**	
Nominal Heat Rate (ISO):	**N/A Btu/kWh-HHV**	
Capital Cost Category		**(000s) (October 1, 2010$)**
Civil Structural Material and Installation		**6,760**
Mechanical Equipment Supply and Installation (and well costs)		**107,545**
Electrical / I&C Supply and Installation		**13,345**
Project Indirects (1)		**29,000**
EPC Cost before Contingency and Fee		**156,650**
Fee and Contingency		**18,798**
Total Project EPC		**175,448**
Owner Costs (excluding project finance)		**31,598**
Total Project Cost (excluding finance)		**207,046**
Total Project EPC	**/ kW**	**3,509**
Owner Costs 18% (excluding project finance)	**/ kW**	**632**
Total Project Cost (excluding project finance)	**/ kW**	**4,141**

(1) Includes engineering, distributable costs, scaffolding, construction management, and start-up.

For this type of technology and power plant configuration, our regional adjustments took into consideration the following: seismic design differences, local technical enhancements (e.g., additional noise remediation that is generally required in urban siting), remote location issues, labor wage and productivity differences, location adjustments, and the increase in overheads associated with these five adjustments. It was assumed that geothermal facilities would only be considered in 13 states: Alaska, Arizona, California, Colorado, Florida, Hawaii, Idaho, Nevada, New Mexico, Oregon, Utah, Washington, and Wyoming.

Seismic design differences among the various locations were based on U.S. seismic map information that detailed the various seismic zones throughout the U.S. No cost increases were associated with seismic Zone 0 and cost step increases were considered for Zones 1, 2, 3 and 4.

Remote location issues are related to geographic areas that typically require installation of man camps, higher craft incentives, and higher per diems are generally required with respect to construction, due to the fact that such areas are long distances from urban areas, where labor is generally abundant. Remote location designations were also considered in locations where higher equipment freight costs are typically incurred, which for example are regions not near established rail or highway access. Remote locations related to the Geothermal Facility include Fairbanks, Alaska; Honolulu, Hawaii; Albuquerque, New Mexico; and Cheyenne, Wyoming.

Labor wage and productivity differences were handled as discussed in Section 2.5.1, taking into consideration the amount of labor we estimated for the GT Facility.

Location adjustments were made to locations where higher cost of living levels are incurred and/or where population density generally correlates to higher construction costs for power and other infrastructure projects. These locations include Alaska, California, Hawaii, and Wyoming.

Table 17-2 presents the GT Facility capital cost variations for alternative U.S. plant locations.

TABLE 17-2 – LOCATION-BASED COSTS FOR GT
(OCTOBER 1, 2010 DOLLARS)

State	City	Base Project Cost ($/kW)	Location Percent Variation	Delta Cost Difference ($/kW)	Total Location Project Cost ($/kW)
Alaska	Anchorage	4,140	17.1%	710	4,850
Alaska	Fairbanks	4,140	26.0%	1,075	5,215
Alabama	Huntsville	0	0.0%	0	0
Arizona	Phoenix	4,140	-3.0%	(125)	4,015
Arkansas	Little Rock	0	0.0%	0	0
California	Los Angeles	4,140	6.5%	270	4,410
California	Redding	4,140	2.1%	88	4,228
California	Bakersfield	4,140	3.1%	127	4,267
California	Sacramento	4,140	5.4%	222	4,362
California	San Francisco	4,140	13.4%	553	4,693
Colorado	Denver	4,140	-2.7%	(112)	4,028
Connecticut	Hartford	0	0.0%	0	0
Delaware	Dover	0	0.0%	0	0
District of Columbia	Washington	0	0.0%	0	0
Florida	Tallahassee	0	0.0%	0	0
Florida	Tampa	0	0.0%	0	0
Georgia	Atlanta	0	0.0%	0	0
Hawaii	Honolulu	4,140	28.5%	1,178	5,318
Idaho	Boise	4,140	-2.5%	(105)	4,035
Illinois	Chicago	0	0.0%	0	0
Indiana	Indianapolis	0	0.0%	0	0
Iowa	Davenport	0	0.0%	0	0
Iowa	Waterloo	0	0.0%	0	0
Kansas	Wichita	0	0.0%	0	0
Kentucky	Louisville	0	0.0%	0	0
Louisiana	New Orleans	0	0.0%	0	0
Maine	Portland	0	0.0%	0	0
Maryland	Baltimore	0	0.0%	0	0
Massachusetts	Boston	0	0.0%	0	0
Michigan	Detroit	0	0.0%	0	0
Michigan	Grand Rapids	0	0.0%	0	0
Minnesota	St. Paul	0	0.0%	0	0
Mississippi	Jackson	0	0.0%	0	0
Missouri	St. Louis	0	0.0%	0	0
Missouri	Kansas City	0	0.0%	0	0
Montana	Great Falls	0	0.0%	0	0
Nebraska	Omaha	0	0.0%	0	0
New Hampshire	Concord	0	0.0%	0	0
New Jersey	Newark	0	0.0%	0	0

State	City	Base Project Cost ($/kW)	Location Percent Variation	Delta Cost Difference ($/kW)	Total Location Project Cost ($/kW)
New Mexico	Albuquerque	4,140	-1.8%	(76)	4,064
New York	New York	0	0.0%	0	0
New York	Syracuse	0	0.0%	0	0
Nevada	Las Vegas	4,140	3.6%	150	4,290
North Carolina	Charlotte	0	0.0%	0	0
North Dakota	Bismarck	0	0.0%	0	0
Ohio	Cincinnati	0	0.0%	0	0
Oregon	Portland	4,140	2.0%	81	4,221
Pennsylvania	Philadelphia	0	0.0%	0	0
Pennsylvania	Wilkes-Barre	0	0.0%	0	0
Rhode Island	Providence	0	0.0%	0	0
South Carolina	Spartanburg	0	0.0%	0	0
South Dakota	Rapid City	0	0.0%	0	0
Tennessee	Knoxville	0	0.0%	0	0
Texas	Houston	0	0.0%	0	0
Utah	Salt Lake City	4,140	-2.9%	(118)	4,022
Vermont	Burlington	0	0.0%	0	0
Virginia	Alexandria	0	0.0%	0	0
Virginia	Lynchburg	0	0.0%	0	0
Washington	Seattle	4,140	3.8%	158	4,298
Washington	Spokane	4,140	-1.7%	(72)	4,068
West Virginia	Charleston	0	0.0%	0	0
Wisconsin	Green Bay	0	0.0%	0	0
Wyoming	Cheyenne	4,140	-2.6%	(106)	4,034
Puerto Rico	Cayey	0	0.0%	0	0

17.5 O&M ESTIMATE

In addition to the general items discussed in the section of this report entitled O&M Estimate, the Binary Facility includes major maintenance on the turbines, electric generator (each approximately every six years) and well field maintenance, which can vary depending on the Binary Facility resource. Table 17-3 presents the FOM and VOM expenses for the Binary Facility.

TABLE 17-3 – O&M EXPENSES FOR BINARY

Technology:	GT
Fixed O&M Expense	$43.82/kW-year
Variable O&M Expense	$5.15/MWh

17.6 ENVIRONMENTAL COMPLIANCE INFORMATION

Table 17-4 presents environmental emissions for the Binary Facility.

TABLE 17-4 – ENVIRONMENTAL EMISSIONS FOR BINARY

Technology:	Binary
NO_X	0 per MWh
SO_2	0.2 per MWh
CO_2	120 per MWh

18. MUNICIPAL SOLID WASTE (MSW)

18.1 MECHANICAL EQUIPMENT AND SYSTEMS

The MSW Facility processes approximately 2,000 tons per day of MSW and produces approximately 50 MW. Three refuse-fired boilers are installed, which incorporate the Marin mass-burning technology and grates specifically designed for combusting waste having an HHV between 4,000 and 6,500 Btu/lb. The three boilers together produce approximately 450,000 lb/hr of 900 psia steam.

Grapple cranes are used to transfer solid waste from a storage pit to loading chutes, where hydraulically operated feeds push the MSW onto the grates at a rate determined by the combustion control system. The Martin grates are constructed as assemblies of modular grate units. The units are driven by hydraulic systems to provide a reverse reciprocating motion of the grates, which move the burning refuse along the length of the downward sloped grate. At the end of its travel along the grate, the MSW is completely combusted, and the remaining ash residue falls into a proprietary Martin ash residue discharger, which receives the combustion residue and cools it in a quench chamber. The fly ash from the dry flue gas scrubber and fabric filter baghouse is conveyed to the ash discharger where it is combined with the bottom ash and quenched. After being quenched, the combined ash residue is pushed up an inclined draining/drying chute. Excess water from the residue drains back into the quench bath. The residue, containing sufficient moisture to prevent dusting, is transferred by a conveyor to a residue storage pit. Clamshell grapple cranes transport the residue to a scalper screen. The scalper screen extracts pieces of the residue larger than a certain size in order to protect the downstream equipment. The smaller material which passes through the scalper screen is fed onto a conveyer belt which discharges onto a vibrating feeder. The vibrating feeder passes the residue beneath a magnetic drum to separate ferrous material from the ash. Non-magnetic residue falls onto a distribution conveyor for distribution to a transport vehicle. Ferrous material is conveyed to a rotating trommel screen for cleaning, after which it is conveyed to a roll-off container.

Each boiler is equipped with a dry flue gas scrubber in combination with a reverse air fabric filter baghouse. The dry scrubbers remove the acid gases (mainly SO_2, hydrochloric acid and hydrofluoric acid) from the flue gas. A hydrated lime injection system prior to the dry scrubber augments the AGR capability of the system. The reverse air baghouse reduces dioxin/furan and particulate emissions. The facility also uses selective non-catalytic reduction ("SNCR") for NO_X control, and activated carbon injection for mercury control.

Steam from the boilers is used to drive a single condensing ST for the production of approximately 50 MW of net electricity. The ST exhausts to a water-cooled condenser which receives circulating cooling water from an evaporative-type cooling tower. The ST includes extraction taps to provide steam for feedwater heating, air preheating and other miscellaneous steam requirements. The MSW process flow diagram at a high level is similar to the pulverized coal flow diagram, except that the fuel source is MSW, rather than coal (see Figure 3-1).

The MSW process flow diagram at a high level is similar to the pulverized coal flow diagram, except that the fuel source is MSW, rather than coal.

18.2 ELECTRICAL AND CONTROL SYSTEMS

The MSW Facility has one ST electric generator. The generator is a 60 Hz machine rated at approximately 70 MVA with an output voltage of 13.8 kV. The ST electric generator is connected to a high-voltage bus in the facility switchyard via a dedicated generator circuit breaker, GSU, high-voltage circuit breaker and a disconnect switch. The GSU increases the voltage from the electric generator from 13.8 kV to interconnected transmission system high voltage.

The MSW Facility is controlled using a DCS. The DCS provides centralized control of the facility by integrating the control systems provided with the boiler, ST and associated electric generator, and the control of BOP systems and equipment.

18.3 OFF-SITE REQUIREMENTS

MSW is delivered to the facility via rail, truck or barge. Water for all processes at the MSW Facility can be obtained from one of a variety of sources. The MSW Facility uses a water treatment system and a high-efficiency reverse osmosis system to reduce the dissolved solids from the cooling water and to provide distilled water for boiler make-up. Wastewater is sent to a municipal wastewater system or other approved alternative. Further, the electrical interconnection from the MSW Facility on-site switchyard is effectuated by a connection to an adjacent utility substation.

18.4 CAPITAL COST ESTIMATE

The base Cost Estimate for the MSW Facility with a nominal capacity of 50 MW is $8,232/kW. Table 18-1 summarizes the Cost Estimate categories for the GT Facility.

TABLE 18-1 – BASE PLANT SITE CAPITAL COST ESTIMATE FOR MSW

Technology:	**MSW**	
Nominal Capacity (ISO):	**50,000 kW**	
Nominal Heat Rate (ISO):	**18,000 Btu/kWh-HHV**	
Capital Cost Category		**(000s) (October 1, 2010$)**
Civil Structural Material and Installation		**33,875**
Mechanical Equipment Supply and Installation		**183,000**
Electrical / I&C Supply and Installation		**25,300**
Project Indirects (1)		**56,080**
EPC Cost before Contingency and Fee		**298,255**
Fee and Contingency		**44,738**
Total Project EPC		**342,993**
Owner Costs (excluding project finance)		**68,599**
Total Project Cost (excluding finance)		**411,592**
Total Project EPC	**/ kW**	**6,860**
Owner Costs 20% (excluding project finance)	**/ kW**	**1,372**
Total Project Cost (excluding project finance)	**/ kW**	**8,232**

(1) Includes engineering, distributable costs, scaffolding, construction management, and start-up.

For this type of technology and power plant configuration, our regional adjustments took into consideration the following: seismic design differences, local enhancements, remote location issues, labor wage and productivity differences, location adjustments, and the increase in overheads associated with these five adjustments.

Seismic design differences among the various locations were based on U.S. seismic map information that detailed the various seismic zones throughout the U.S. No cost increases were associated with seismic Zone 0 and cost step increases were considered for Zones 1, 2, 3 and 4.

Remote location issues are related to geographic areas that typically require installation of man camps, higher craft incentives, and higher per diems are generally required with respect to construction, due to the fact that such areas are long distances from urban areas, where labor is generally abundant. Remote location designations were also considered in locations where higher equipment freight costs are typically incurred, which for example are regions not near established rail or highway access. Remote locations related to the MSW Facility include

Fairbanks, Alaska; Honolulu, Hawaii; Albuquerque, New Mexico; Cheyenne, Wyoming; and Cayey, Puerto Rico.

Labor wage and productivity differences were handled as discussed in Section 2.5.1, taking into consideration the amount of labor we estimated for the MSW Facility.

Location adjustments were made to locations where higher cost of living levels are incurred and/or where population density generally correlates to higher construction costs for power and other infrastructure projects. These locations include Alaska, California, Connecticut, Delaware, District of Columbia, Hawaii, Illinois, Maine, Maryland, Massachusetts, Michigan, Minnesota, New York, Ohio, and Wisconsin.

Table 18-2 presents the MSW Facility capital cost variations for alternative U.S. plant locations.

TABLE 18-2 – LOCATION-BASED COSTS FOR MSW

(OCTOBER 1, 2010 DOLLARS)

State	City	Base Project Cost ($/kW)	Location Percent Variation	Delta Cost Difference ($/kW)	Total Location Project Cost ($/kW)
Alaska	Anchorage	8,240	12.8%	1,054	9,294
Alaska	Fairbanks	8,240	17.7%	1,459	9,699
Alabama	Huntsville	8,240	-5.8%	(474)	7,766
Arizona	Phoenix	8,240	-4.5%	(371)	7,869
Arkansas	Little Rock	8,240	-4.7%	(387)	7,853
California	Los Angeles	8,240	5.2%	430	8,670
California	Redding	8,240	1.9%	154	8,394
California	Bakersfield	8,240	2.1%	176	8,416
California	Sacramento	8,240	5.7%	472	8,712
California	San Francisco	8,240	13.4%	1,104	9,344
Colorado	Denver	8,240	-4.7%	(384)	7,856
Connecticut	Hartford	8,240	5.2%	429	8,669
Delaware	Dover	8,240	3.1%	258	8,498
District of Columbia	Washington	8,240	1.7%	140	8,380
Florida	Tallahassee	8,240	-7.9%	(649)	7,591
Florida	Tampa	8,240	-3.3%	(268)	7,972
Georgia	Atlanta	8,240	-6.3%	(515)	7,725
Hawaii	Honolulu	8,240	19.9%	1,638	9,878
Idaho	Boise	8,240	-3.8%	(315)	7,925
Illinois	Chicago	8,240	12.5%	1,033	9,273
Indiana	Indianapolis	8,240	-0.9%	(78)	8,162
Iowa	Davenport	8,240	-1.0%	(79)	8,161
Iowa	Waterloo	8,240	-6.7%	(548)	7,692
Kansas	Wichita	8,240	-5.4%	(446)	7,794
Kentucky	Louisville	8,240	-4.8%	(392)	7,848
Louisiana	New Orleans	8,240	-7.3%	(603)	7,637
Maine	Portland	8,240	-4.1%	(341)	7,899
Maryland	Baltimore	8,240	-1.7%	(144)	8,096

State	City	Base Project Cost ($/kW)	Location Percent Variation	Delta Cost Difference ($/kW)	Total Location Project Cost ($/kW)
Massachusetts	Boston	8,240	11.8%	975	9,215
Michigan	Detroit	8,240	2.7%	220	8,460
Michigan	Grand Rapids	8,240	-5.8%	(475)	7,765
Minnesota	St. Paul	8,240	2.3%	190	8,430
Mississippi	Jackson	8,240	-5.7%	(471)	7,769
Missouri	St. Louis	8,240	3.0%	247	8,487
Missouri	Kansas City	8,240	1.8%	150	8,390
Montana	Great Falls	8,240	-4.0%	(333)	7,907
Nebraska	Omaha	8,240	-3.0%	(243)	7,997
New Hampshire	Concord	8,240	-2.0%	(166)	8,074
New Jersey	Newark	8,240	11.9%	984	9,224
New Mexico	Albuquerque	8,240	-3.5%	(287)	7,953
New York	New York	8,240	26.3%	2,167	10,407
New York	Syracuse	8,240	-0.4%	(31)	8,209
Nevada	Las Vegas	8,240	4.5%	370	8,610
North Carolina	Charlotte	8,240	-8.3%	(688)	7,552
North Dakota	Bismarck	8,240	-5.6%	(463)	7,777
Ohio	Cincinnati	8,240	-3.1%	(256)	7,984
Oregon	Portland	8,240	1.7%	136	8,376
Pennsylvania	Philadelphia	8,240	8.5%	698	8,938
Pennsylvania	Wilkes-Barre	8,240	-3.4%	(283)	7,957
Rhode Island	Providence	8,240	2.8%	229	8,469
South Carolina	Spartanburg	8,240	-9.5%	(786)	7,454
South Dakota	Rapid City	8,240	-7.9%	(654)	7,586
Tennessee	Knoxville	8,240	-7.3%	(603)	7,637
Texas	Houston	8,240	-7.3%	(598)	7,642
Utah	Salt Lake City	8,240	-4.9%	(401)	7,839
Vermont	Burlington	8,240	-4.4%	(364)	7,876
Virginia	Alexandria	8,240	-1.8%	(148)	8,092
Virginia	Lynchburg	8,240	-5.1%	(420)	7,820
Washington	Seattle	8,240	4.1%	342	8,582
Washington	Spokane	8,240	-2.8%	(228)	8,012
West Virginia	Charleston	8,240	-1.6%	(135)	8,105
Wisconsin	Green Bay	8,240	-2.3%	(186)	8,054
Wyoming	Cheyenne	8,240	-4.6%	(383)	7,857
Puerto Rico	Cayey	8,240	-1.7%	(144)	8,096

18.5 O&M ESTIMATE

In addition to the general items discussed in the section of this report entitled O&M Estimate, the MSW Facility includes major maintenance for the feedstock handling, ST, electric generator, boiler, and BOP systems. Table 18-3 presents the O&M expenses for the MSW Facility.

TABLE 18-3 – O&M EXPENSES FOR MSW

Technology:	MSW
Fixed O&M Expense	$373.76/kW-year
Variable O&M Expense	$8.33/MWh

18.6 ENVIRONMENTAL COMPLIANCE INFORMATION

As mentioned above in the section on mechanical systems, each boiler is equipped with a dry flue gas scrubber in combination with a reverse air fabric filter baghouse. A hydrated lime injection system prior to the dry scrubber augments the AGR capability of the system. The reverse air baghouse reduces dioxin/furan and particulate emissions, an SNCR is used for NO_X control, and activated carbon injection is used for mercury control. Table 18-4 presents environmental emissions for the MSW Facility.

TABLE 18-4 – ENVIRONMENTAL EMISSIONS FOR MSW

Technology:	MSW
NO_X	0.27 lb/MMBtu
SO_2	0.07 lb/MMBtu
CO_2	200 lb/MMBtu

19. HYDROELECTRIC (HY)

19.1 MECHANICAL EQUIPMENT AND SYSTEMS

The 500 MW Hydroelectric ("HY") Facility is composed of two 250 MW vertical shaft Francis turbine generator units with a minimum of 650 feet (200 meters) of head. Figure 19-1 presents the HY process flow diagram.

FIGURE 19-1 – HY DESIGN CONFIGURATION

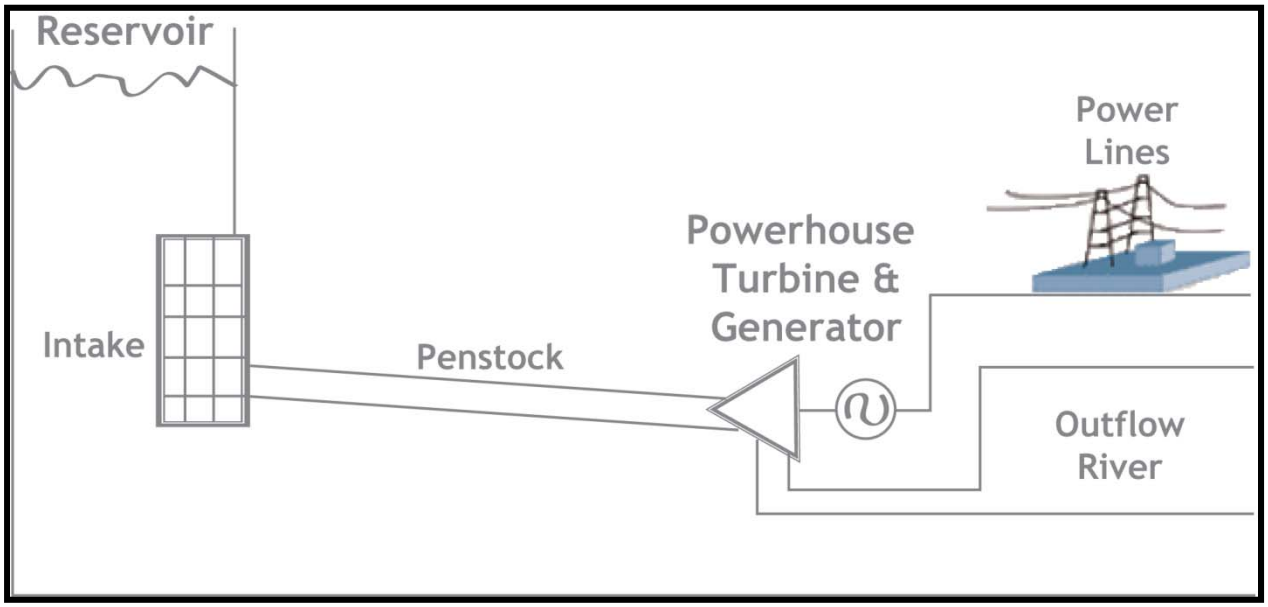

19.2 ELECTRICAL AND CONTROL SYSTEMS

The HY Facility has two synchronous electric generators. Each generator is a 60 Hz machine rated at approximately 300 MVA with an output voltage of approximately 23 kV. Each electric generator is connected to a high-voltage bus in the facility switchyard via a dedicated generator circuit breaker, GSU, high-voltage circuit breaker and a disconnect switch. In some instances, the generator is connected directly to its GSU and connected through a disconnect switch between two breakers on the high-voltage bus. The GSU increases the voltage from the electric generator from 23 kV to interconnected transmission system high voltage.

The HY Facility is controlled using a DCS. The DCS provides centralized control of the facility by integrating the control systems provided hydro-turbine and associated electric generator and the control of BOP systems and equipment.

19.3 OFF-SITE REQUIREMENTS

Since the fuel source for the HY Facility is renewable, the most important off-site requirement is the electrical interconnection to the high-voltage transmission system of the utility, which can be effectuated through the HY Facility switchyard.

19.4 CAPITAL COST ESTIMATE

The base Cost Estimate for the HY Facility with a nominal capacity of 500 MW is $3,076/kW. Table 19-1 summarizes the Cost Estimate categories for the HY Facility.

TABLE 19-1 – BASE PLANT SITE CAPITAL COST ESTIMATE FOR HY

Technology:	**HY**	
Nominal Capacity (ISO):	**500,000 kW**	
Nominal Heat Rate (ISO):	**Not Applicable**	
Capital Cost Category		**(000s) (October 1, 2010$)**
Civil Structural Material and Installation		**634,250**
Mechanical Equipment Supply and Installation		**253,000**
Electrical / I&C Supply and Installation		**77,600**
Project Indirects (1)		**174,500**
EPC Cost before Contingency and Fee		**1,139,350**
Fee and Contingency		**142,419**
Total Project EPC		**1,281,769**
Owner Costs (excluding project finance)		**256,354**
Total Project Cost (excluding finance)		**1,538,123**
Total Project EPC	**/ kW**	**2,564**
Owner Costs 20% (excluding project finance)	**/ kW**	**513**
Total Project Cost (excluding project finance)	**/ kW**	**3,076**

(1) Includes engineering, distributable costs, scaffolding, construction management, and start-up.

For this type of technology and power plant configuration, our regional adjustments took into consideration the following: seismic design differences, local technical enhancements (e.g., additional noise remediation that is generally required in urban siting), remote location issues, labor wage and productivity differences, location adjustments, and the increase in overheads associated with these five adjustments. The assumption was made that hydroelectric facilities would only be considered for construction in the states of Alaska, California, Colorado, Connecticut, Idaho, Maine, Missouri, Montana, North Carolina, Ohio, Oregon, South Dakota, and Washington.

Seismic design differences among the various locations were based on U.S. seismic map information that detailed the various seismic zones throughout the U.S. No cost increases were associated with seismic Zone 0 and cost step increases were considered for Zones 1, 2, 3 and 4.

The locations with local technical enhancements include California, Colorado, Connecticut, and Delaware. These are areas where technical enhancements generally need to be made by a project developer or utility to comply with the applicable permitting/siting requirements.

Remote location issues are related to geographic areas that typically require installation of man camps, higher craft incentives, and higher per diems are generally required with respect to construction, due to the fact that such areas are long distances from urban areas, where labor is generally abundant. Remote location designations were also considered in locations where higher equipment freight costs are typically incurred, which for example are regions not near established rail or highway access. The remote location related to the Hydroelectric Facility is Fairbanks, Alaska.

Labor wage and productivity differences were handled as discussed in Section 2.5.1, taking into consideration the amount of labor we estimated for the HY Facility.

Location adjustments were made to locations where higher cost of living levels are incurred and/or where population density generally correlates to higher construction costs for power and other infrastructure projects. These locations include Alaska, California, Connecticut, Maine, Ohio, and South Dakota.

Table 19-2 presents the HY Facility capital cost variations for alternative U.S. plant locations.

TABLE 19-2 – LOCATION-BASED COSTS FOR HY
(OCTOBER 1, 2010 DOLLARS)

State	City	Base Project Cost ($/kW)	Location Percent Variation	Delta Cost Difference ($/kW)	Total Location Project Cost ($/kW)
Alaska	Anchorage	3,080	20.1%	619	3,699
Alaska	Fairbanks	3,080	31.6%	974	4,054
Alabama	Huntsville	0	0.0%	0	0
Arizona	Phoenix	0	0.0%	0	0
Arkansas	Little Rock	0	0.0%	0	0
California	Los Angeles	3,080	7.4%	228	3,308
California	Redding	3,080	2.8%	88	3,168
California	Bakersfield	3,080	2.4%	75	3,155
California	Sacramento	3,080	3.7%	113	3,193
California	San Francisco	3,080	13.2%	408	3,488
Colorado	Denver	3,080	-1.3%	(40)	3,040
Connecticut	Hartford	3,080	6.4%	197	3,277
Delaware	Dover	0	0.0%	0	0
District of Columbia	Washington	0	0.0%	0	0
Florida	Tallahassee	0	0.0%	0	0
Florida	Tampa	0	0.0%	0	0
Georgia	Atlanta	0	0.0%	0	0
Hawaii	Honolulu	0	0.0%	0	0
Idaho	Boise	3,080	-1.6%	(49)	3,031
Illinois	Chicago	0	0.0%	0	0
Indiana	Indianapolis	0	0.0%	0	0
Iowa	Davenport	0	0.0%	0	0
Iowa	Waterloo	0	0.0%	0	0
Kansas	Wichita	0	0.0%	0	0
Kentucky	Louisville	0	0.0%	0	0
Louisiana	New Orleans	0	0.0%	0	0
Maine	Portland	3,080	-0.8%	(23)	3,057
Maryland	Baltimore	0	0.0%	0	0
Massachusetts	Boston	0	0.0%	0	0
Michigan	Detroit	0	0.0%	0	0
Michigan	Grand Rapids	0	0.0%	0	0
Minnesota	St. Paul	0	0.0%	0	0
Mississippi	Jackson	0	0.0%	0	0
Missouri	St. Louis	3,080	1.3%	41	3,121
Missouri	Kansas City	3,080	1.4%	42	3,122
Montana	Great Falls	3,080	-1.2%	(37)	3,043
Nebraska	Omaha	0	0.0%	0	0
New Hampshire	Concord	0	0.0%	0	0
New Jersey	Newark	0	0.0%	0	0
New Mexico	Albuquerque	0	0.0%	0	0

State	City	Base Project Cost ($/kW)	Location Percent Variation	Delta Cost Difference ($/kW)	Total Location Project Cost ($/kW)
New York	New York	0	0.0%	0	0
New York	Syracuse	0	0.0%	0	0
Nevada	Las Vegas	0	0.0%	0	0
North Carolina	Charlotte	3,080	0.0%	20	3,100
North Dakota	Bismarck	0	0.0%	0	0
Ohio	Cincinnati	3,080	-1.6%	(49)	3,031
Oregon	Portland	3,080	4.7%	145	3,225
Pennsylvania	Philadelphia	0	0.0%	0	0
Pennsylvania	Wilkes-Barre	0	0.0%	0	0
Rhode Island	Providence	0	0.0%	0	0
South Carolina	Spartanburg	0	0.0%	0	0
South Dakota	Rapid City	3,080	-3.9%	(119)	2,961
Tennessee	Knoxville	0	0.0%	0	0
Texas	Houston	0	0.0%	0	0
Utah	Salt Lake City	0	0.0%	0	0
Vermont	Burlington	0	0.0%	0	0
Virginia	Alexandria	0	0.0%	0	0
Virginia	Lynchburg	0	0.0%	0	0
Washington	Seattle	3,080	3.5%	109	3,189
Washington	Spokane	3,080	-1.0%	(31)	3,049
West Virginia	Charleston	0	0.0%	0	0
Wisconsin	Green Bay	0	0.0%	0	0
Wyoming	Cheyenne	0	0.0%	0	0
Puerto Rico	Cayey	0	0.0%	0	0

19.5 O&M ESTIMATE

In addition to the general items discussed in the section of the report entitled O&M Estimate, the most significant differentiating O&M expenses for the HY Facility include dam and associated civil major maintenance and hydro-turbine major maintenance, which are generally conducted approximately every ten years. Because HY power plants are typically operated when available, most operators consider a majority of O&M expenses for this technology to be fixed. Table 19-3 presents the O&M expenses for the HY Facility.

TABLE 19-3 – O&M EXPENSES FOR HY

Technology:	HY
Fixed O&M Expense	$13.44/kW-year
Variable O&M Expense	$0/MWh

19.6 ENVIRONMENTAL COMPLIANCE INFORMATION

The HY Facility does not burn a fuel and consequently there are no air emissions from this type of plant. Table 19-4 presents environmental emissions for the HY Facility.

TABLE 19-4 – ENVIRONMENTAL EMISSIONS FOR HY

Technology:	HY
NO_X	0 lb/MMBtu
SO_2	0 lb/MMBtu
CO_2	0 lb/MMBtu

20. PUMPED STORAGE (PS)

20.1 MECHANICAL EQUIPMENT AND SYSTEMS

The 250 MW Pumped Storage ("PS") Facility is composed of two 125 MW Francis turbine generator units. During off-peak hours, water is pumped from a lower reservoir to an upper reservoir using electricity from the grid. During the generating cycle, water is discharged through the reversible turbine generators to produce power. Figure 20-1 presents the PS process flow diagram.

FIGURE 20-1 – PS DESIGN CONFIGURATION

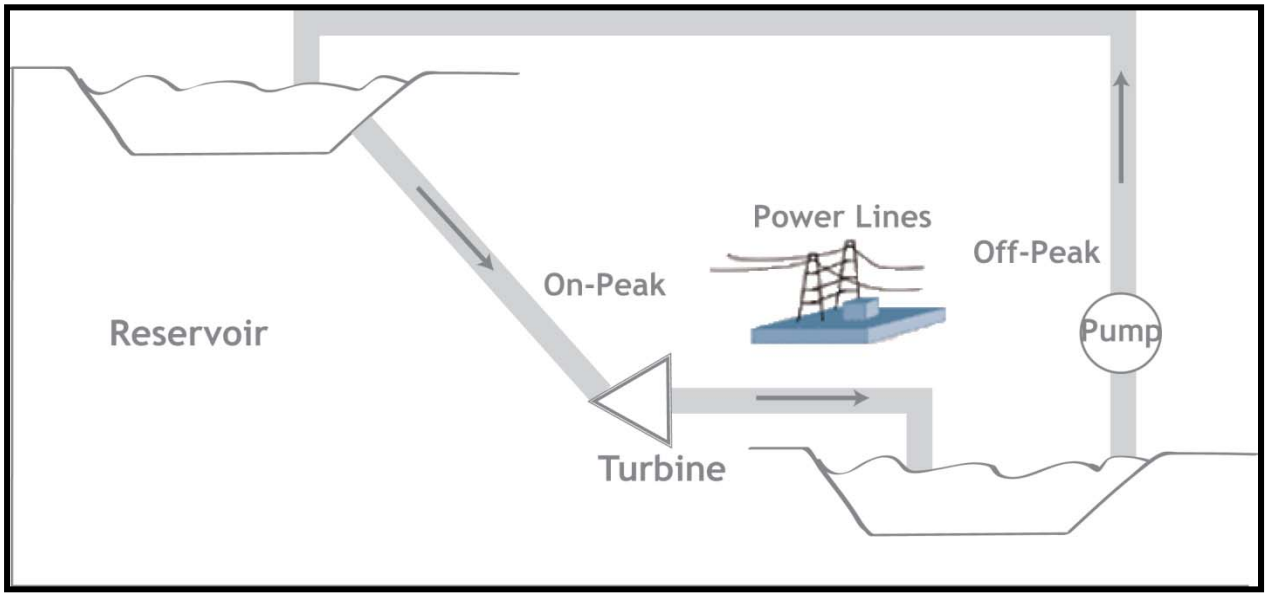

20.2 ELECTRICAL AND CONTROL SYSTEMS

The PS Facility has two synchronous electric generators that are also capable of being operated as motors powered from the grid to provide the pumping function by driving the Francis hydro-turbines in reverse. The generators are 60 Hz machines rated at approximately 150 MVA with an output voltage of 13.8 kV to 24 kV. Each electric generator is connected to a high-voltage bus in the facility switchyard via a dedicated generator circuit breaker, GSU, high-voltage circuit breaker and a disconnect switch. The GSU increases the voltage from the electric generator voltage to the interconnected transmission system high voltage.

The PS Facility is controlled using a DCS. The DCS provides centralized control of the facility by integrating the control systems provided with the hydro-turbine and associated electric generator and the control of BOP systems and equipment.

20.3 OFF-SITE REQUIREMENTS

Similar to the HY Facility, since the fuel source for the PS Facility is renewable, the most important off-site requirement is the electrical interconnection to the high-voltage transmission system of the utility, which can be effectuated through the PS switchyard. Unlike the HY Facility, which uses the backfeed from the utility transmission system only to run required plant

loads when the hydro-turbines are not operating, significant volumes of electricity are consumed in off-peak hours at the PS Facility.

20.4 CAPITAL COST ESTIMATE

The base Cost Estimate for the PS Facility with a nominal capacity of 250 MW is $5,595/kW. Table 20-1 summarizes the Cost Estimate categories for the PS Facility. However, it should be noted that the construction costs for future pumped storage power plants are strongly impacted by the size (e.g., larger plants are most generally lower cost on a $/kW basis) and by the existing infrastructure that may be leveraged in the development, design, and construction.

TABLE 20-1 – BASE PLANT SITE CAPITAL COST ESTIMATE FOR PS

Technology:	**PS**	
Nominal Capacity (ISO):	**250,000 kW**	
Nominal Heat Rate (ISO):	**N/A Btu/kWh-HHV**	
Capital Cost Category		**(000s) (October 1, 2010$)**
Civil Structural Material and Installation		**653,000**
Mechanical Equipment Supply and Installation		**152,400**
Electrical / I&C Supply and Installation		**73,700**
Project Indirects (1)		**171,100**
EPC Cost before Contingency and Fee		**1,050,200**
Fee and Contingency		**115,522**
Total Project EPC		**1,165,722**
Owner Costs (excluding project finance)		**233,144**
Total Project Cost (excluding finance)		**1,398,866**
Total Project EPC	**/ kW**	**4,663**
Owner Costs 20% (excluding project finance)	**/ kW**	**933**
Total Project Cost (excluding project finance)	**/ kW**	**5,595**

(1) Includes engineering, distributable costs, scaffolding, construction management, and start-up.

For this type of technology and power plant configuration, our regional adjustments took into consideration the following: seismic design differences, local technical enhancements, remote location issues, labor wage and productivity differences, location adjustments, and the increase in overheads associated with these five adjustments listed. While the analysis shown below

contemplates cost adjustment factors for each area considered, realistically, there are certain areas that do not have enough elevation difference to cost effectively produce a pumped storage plant.

Seismic design differences among the various locations were based on U.S. seismic map information that detailed the various seismic zones throughout the U.S. No cost increases were associated with seismic Zone 0 and cost step increases were considered for Zones 1, 2, 3 and 4.

The locations with local technical enhancements include California, Colorado, Connecticut, Delaware, District of Columbia, Louisiana, Maryland, Massachusetts, New Jersey, New York, Rhode Island, Vermont, and Virginia. These are areas where noise, visual impacts, and other technical enhancements generally need to be made by a project developer or utility to comply with the applicable permitting/siting requirements.

Remote location issues are related to geographic areas that typically require installation of man camps, higher craft incentives, and higher per diems are generally required with respect to construction, due to the fact that such areas are long distances from urban areas, where labor is generally abundant. Remote location designations were also considered in locations where higher equipment freight costs are typically incurred, which for example are regions not near established rail or highway access. Remote locations related to the Pumped Storage Facility include Fairbanks, Alaska; Honolulu, Hawaii; Albuquerque, New Mexico; Cheyenne, Wyoming; and Cayey, Puerto Rico.

Labor wage and productivity differences were handled as discussed in Section 2.5.1., taking into consideration the amount of labor we estimated for the PS Facility.

Location adjustments were made to locations where higher cost of living levels are incurred and/or where population density generally correlates to higher construction costs for power and other infrastructure projects. These locations include Alaska, California, Connecticut, Delaware, District of Columbia, Hawaii, Illinois, Maine, Maryland, Massachusetts, Michigan, Minnesota, New York, Ohio; and Wisconsin.

Table 20-2 presents the PS Facility capital cost variations for alternative U.S. plant locations.

TABLE 20-2 – LOCATION-BASED COSTS FOR PS
(OCTOBER 1, 2010 DOLLARS)

State	City	Base Project Cost ($/kW)	Location Percent Variation	Delta Cost Difference ($/kW)	Total Location Project Cost ($/kW)
Alaska	Anchorage	5,595	17.6%	985	6,580
Alaska	Fairbanks	5,595	24.7%	1,382	6,977
Alabama	Huntsville	5,595	-7.4%	(413)	5,182
Arizona	Phoenix	5,595	-5.7%	(322)	5,273
Arkansas	Little Rock	5,595	-6.0%	(335)	5,260
California	Los Angeles	5,595	7.1%	398	5,993
California	Redding	5,595	2.5%	141	5,736
California	Bakersfield	5,595	3.0%	166	5,761
California	Sacramento	5,595	7.5%	422	6,017
California	San Francisco	5,595	17.8%	994	6,589
Colorado	Denver	5,595	-5.9%	(329)	5,266
Connecticut	Hartford	5,595	7.0%	392	5,987
Delaware	Dover	5,595	4.3%	243	5,838
District of Columbia	Washington	5,595	2.8%	155	5,750
Florida	Tallahassee	0	0	0	0
Florida	Tampa	0	0	0	0
Georgia	Atlanta	5,595	-8.0%	(449)	5,146
Hawaii	Honolulu	5,595	15.8%	883	6,478
Idaho	Boise	5,595	-4.9%	(273)	5,322
Illinois	Chicago	5,595	16.2%	907	6,502
Indiana	Indianapolis	5,595	-1.1%	(64)	5,531
Iowa	Davenport	5,595	-1.2%	(66)	5,529
Iowa	Waterloo	5,595	-8.5%	(476)	5,119
Kansas	Wichita	0	0	0	0
Kentucky	Louisville	5,595	-6.1%	(341)	5,254
Louisiana	New Orleans	5,595	-9.3%	(519)	5,076
Maine	Portland	5,595	-5.2%	(290)	5,305
Maryland	Baltimore	5,595	-2.0%	(110)	5,485
Massachusetts	Boston	5,595	15.5%	869	6,464
Michigan	Detroit	5,595	3.5%	196	5,791
Michigan	Grand Rapids	5,595	-7.4%	(413)	5,182
Minnesota	St. Paul	5,595	3.0%	168	5,763
Mississippi	Jackson	5,595	-7.3%	(410)	5,185
Missouri	St. Louis	5,595	4.0%	222	5,817
Missouri	Kansas City	5,595	2.4%	136	5,731
Montana	Great Falls	5,595	-5.1%	(286)	5,309
Nebraska	Omaha	5,595	-3.7%	(209)	5,386
New Hampshire	Concord	5,595	-2.5%	(140)	5,455
New Jersey	Newark	5,595	15.5%	867	6,462
New Mexico	Albuquerque	5,595	-4.4%	(245)	5,350

State	City	Base Project Cost ($/kW)	Location Percent Variation	Delta Cost Difference ($/kW)	Total Location Project Cost ($/kW)
New York	New York	5,595	34.3%	1,921	7,516
New York	Syracuse	5,595	-0.2%	(13)	5,582
Nevada	Las Vegas	5,595	5.8%	326	5,921
North Carolina	Charlotte	5,595	-10.7%	(599)	4,996
North Dakota	Bismarck	5,595	-7.1%	(399)	5,196
Ohio	Cincinnati	5,595	-3.9%	(220)	5,375
Oregon	Portland	5,595	3.1%	171	5,766
Pennsylvania	Philadelphia	5,595	11.0%	615	6,210
Pennsylvania	Wilkes-Barre	5,595	-4.3%	(243)	5,352
Rhode Island	Providence	5,595	3.7%	209	5,804
South Carolina	Spartanburg	5,595	-12.2%	(684)	4,911
South Dakota	Rapid City	5,595	-10.2%	(569)	5,026
Tennessee	Knoxville	5,595	-9.4%	(526)	5,069
Texas	Houston	5,595	-9.3%	(523)	5,072
Utah	Salt Lake City	5,595	-6.2%	(344)	5,251
Vermont	Burlington	5,595	-5.5%	(309)	5,286
Virginia	Alexandria	5,595	-2.2%	(121)	5,474
Virginia	Lynchburg	5,595	-6.5%	(366)	5,229
Washington	Seattle	5,595	5.4%	305	5,900
Washington	Spokane	5,595	-3.5%	(197)	5,398
West Virginia	Charleston	5,595	-2.0%	(114)	5,481
Wisconsin	Green Bay	5,595	-2.8%	(157)	5,438
Wyoming	Cheyenne	5,595	-5.8%	(324)	5,271
Puerto Rico	Cayey	5,595	-1.7%	(95)	5,500

20.5 O&M ESTIMATE

The O&M discussion in Section 17.5, related to the HY Facility at a high-level is applicable to the PS Facility, including the fact that most operators budget for a given PS facility on a FOM expense basis only. The additional areas of O&M that are applicable to the PS Facility that are not applicable to the HY Facility are pump and associated motor maintenance. Table 20-3 presents the O&M expenses for the PS Facility.

TABLE 20-3 – O&M EXPENSES FOR PS

Technology:	PS
Fixed O&M Expense	$13.03/kW-year
Variable O&M Expense	$0/MWh

20.6 ENVIRONMENTAL COMPLIANCE INFORMATION

The PS Facility does not directly burn a fuel and consequently there are no air emissions from this type of plant. Note that the fuel used to power the off-peak energy market, allowing off-peak pumping to the reservoir, is not considered in this report. Table 20-4 presents environmental emissions for the PS Facility.

TABLE 20-4 – ENVIRONMENTAL EMISSIONS FOR PS

Technology:	PS
NO_X	0 lb/MMBtu
SO_2	0 lb/MMBtu
CO_2	0 lb/MMBtu

21. ONSHORE WIND (WN)

21.1 MECHANICAL EQUIPMENT AND SYSTEMS

The Onshore Wind ("WN") Facility is based on 67 wind turbine generators ("WTGs"), each with a rated capacity of 1.5 MW. The total design capacity is 100 MW.

The turbines are each supported by a conical steel tower, which is widest at the base and tapers in diameter just below the nacelle. A foundation provides the tower with a firm anchor to the ground. The nacelle is attached to the top of the tower and contains the main mechanical components of the wind turbine, which include a variable-speed generator, transmission, and yaw drive. The rotor hub connects to the transmission through one end of the nacelle, and the rotor is then connected to the hub. The WTG has a three-bladed rotor with a diameter of 77 meters. The WTG has an active yaw system in the nacelle to keep the rotor facing into the wind.

Power is generated by the wind turbines, then converted using an onboard transformer to 34.5 kV AC. It is then delivered to a collection system at the base of each turbine. Power from all turbines will be collected by the underground collection circuit.

The collection system supplies power to a new substation designed to step up the voltage to 115 kV for interconnection with the transmission system. Other facility components include access roads, an O&M building and electrical interconnection facilities. Figure 21-1 presents a picture of a typical WN Facility.

FIGURE 21-1 – WN DESIGN CONFIGURATION

21.2 ELECTRICAL AND CONTROL SYSTEMS

The WN Facility has 67 wind turbine-driven electric generators. Each generator is a doubly-fed induction generator that feeds an AC/DC/AC power converter that provides an output of three-phase, 60 Hz electrical power. The power output available is approximately 1.75 MVA with an output voltage of 575 V stepped up to 34.5 kV using a pad-mounted transformer at the base of the wind turbine. The wind turbine transformers are interconnected on one or more underground collector circuits that are connected to a collector bus through a circuit breaker for each circuit. The collector bus is connected to a high-voltage transmission system through the facility substation, which includes a 34.5 kV switch or circuit breaker, GSU, high-voltage circuit breaker, and a disconnect switch. The GSU increases the voltage from the electric generator from 34.5 kV to interconnected transmission system high voltage.

The WN Facility is controlled using a control system generally referred to as the wind farm supervisory control and data acquisition ("SCADA") system. The SCADA system provides centralized control of the facility by integrating the control systems provided with each of the wind turbines and the control of BOP systems and equipment.

21.3 OFF-SITE REQUIREMENTS

Since wind uses a renewable fuel, the most significant off-site requirements are the construction of and interconnection to roads and the electrical interconnection to the utility high-voltage transmission system, as discussed in Section 19.2.

21.4 CAPITAL COST ESTIMATE

The base Cost Estimate for the WN Facility with a nominal capacity of 100 MW is $2,400/kW. Table 21-1 summarizes the Cost Estimate categories for the WN Facility.

TABLE 21-1 – LOCATION-BASED COSTS FOR WN

Technology:	WN	
Nominal Capacity (ISO):	100,000 kW	
Nominal Heat Rate (ISO):	N/A Btu/kWh-HHV	
Capital Cost Category		**(000s) (October 1, 2010$)**
Civil Structural Material and Installation		25,625
Mechanical Equipment Supply and Installation		158,585
Electrical / I&C Supply and Installation		27,753
Project Indirects (1)		8,070
EPC Cost before Contingency and Fee		220,033
Fee and Contingency		10,000
Total Project EPC		230,033
Owner Costs (excluding project finance)		13,802
Total Project Cost (excluding finance)		243,835
Total Project EPC	/ kW	2,300
Owner Costs 6% (excluding project finance)	/ kW	138
Total Project Cost (excluding project finance)	/ kW	2,438

(1) Includes engineering, distributable costs, scaffolding, construction management, and start-up.

For this type of technology and power plant configuration, our regional adjustments took into consideration the following: seismic design differences, remote location issues, labor wage and productivity differences, location adjustments, and owner cost differences and the increase in overheads associated with these five adjustments.

Seismic design differences among the various locations were based on U.S. seismic map information that detailed the various seismic zones throughout the U.S. No cost increases were associated with seismic Zone 0 and cost step increases were considered for Zones 1, 2, 3 and 4.

Remote location issues are related to geographic areas that typically require installation of man camps, higher craft incentives, and higher per diems are generally required with respect to construction, due to the fact that such areas are long distances from urban areas, where labor is generally abundant. Remote location designations were also considered in locations where higher equipment freight costs are typically incurred, which for example are regions not near established rail or highway access. Remote locations related to the WN Facility include

Fairbanks, Alaska; Honolulu, Hawaii; Albuquerque, New Mexico; Cheyenne, Wyoming; and Cayey, Puerto Rico.

Labor wage and productivity differences were handled as discussed in Section 2.5.1, taking into consideration the amount of labor we estimated for the WN Facility.

Location adjustments were made to locations where higher cost of living levels are incurred and/or where population density generally correlates to higher construction costs for power and other infrastructure projects. These locations include Alaska, California, Connecticut, Delaware, District of Columbia, Hawaii, Illinois, Maine, Maryland, Massachusetts, Michigan, Minnesota, New York, Ohio, and Wisconsin.

Owner costs were reviewed based on the need for utility upgrades and/or infrastructure costs such as new facility transmission lines to tie to existing utility transmission substations or existing transmission lines.

Table 21-2 presents the WN Facility capital cost variations for alternative U.S. plant locations.

TABLE 21-2 – LOCATION-BASED COSTS FOR WN

(OCTOBER 1, 2010 DOLLARS)

State	City	Base Project Cost ($/kW)	Location Percent Variation	Delta Cost Difference ($/kW)	Total Location Project Cost ($/kW)
Alaska	Anchorage	2,440	25.2%	615	3,055
Alaska	Fairbanks	2,440	45.0%	1,099	3,539
Alabama	Huntsville	2,440	-3.5%	(86)	2,354
Arizona	Phoenix	2,440	-2.4%	(58)	2,382
Arkansas	Little Rock	2,440	-2.5%	(61)	2,379
California	Los Angeles	2,440	12.4%	304	2,744
California	Redding	2,440	8.2%	200	2,640
California	Bakersfield	2,440	10.0%	243	2,683
California	Sacramento	2,440	10.5%	257	2,697
California	San Francisco	2,440	18.6%	453	2,893
Colorado	Denver	2,440	2.2%	54	2,494
Connecticut	Hartford	2,440	6.6%	162	2,602
Delaware	Dover	2,440	4.6%	111	2,551
District of Columbia	Washington	2,440	7.4%	182	2,622
Florida	Tallahassee	2,440	-5.3%	(128)	2,312
Florida	Tampa	2,440	-2.2%	(53)	2,387
Georgia	Atlanta	2,440	-3.9%	(94)	2,346
Hawaii	Honolulu	2,440	27.4%	668	3,108
Idaho	Boise	2,440	3.4%	83	2,523
Illinois	Chicago	2,440	14.2%	346	2,786
Indiana	Indianapolis	2,440	0.3%	8	2,448
Iowa	Davenport	2,440	4.5%	111	2,551
Iowa	Waterloo	2,440	0.7%	18	2,458
Kansas	Wichita	2,440	1.9%	46	2,486
Kentucky	Louisville	2,440	-2.9%	(70)	2,370

State	City	Base Project Cost ($/kW)	Location Percent Variation	Delta Cost Difference ($/kW)	Total Location Project Cost ($/kW)
Louisiana	New Orleans	2,440	-5.4%	(132)	2,308
Maine	Portland	2,440	6.4%	155	2,595
Maryland	Baltimore	2,440	1.7%	41	2,481
Massachusetts	Boston	2,440	11.1%	270	2,710
Michigan	Detroit	2,440	2.7%	67	2,507
Michigan	Grand Rapids	2,440	-3.2%	(78)	2,362
Minnesota	St. Paul	2,440	7.5%	183	2,623
Mississippi	Jackson	2,440	-3.5%	(85)	2,355
Missouri	St. Louis	2,440	3.6%	88	2,528
Missouri	Kansas City	2,440	1.7%	41	2,481
Montana	Great Falls	2,440	3.9%	95	2,535
Nebraska	Omaha	2,440	3.5%	86	2,526
New Hampshire	Concord	2,440	5.3%	128	2,568
New Jersey	Newark	2,440	10.5%	257	2,697
New Mexico	Albuquerque	2,440	3.8%	93	2,533
New York	New York	2,440	24.6%	600	3,040
New York	Syracuse	2,440	0.8%	20	2,460
Nevada	Las Vegas	2,440	9.0%	219	2,659
North Carolina	Charlotte	2,440	-4.9%	(120)	2,320
North Dakota	Bismarck	2,440	2.1%	50	2,490
Ohio	Cincinnati	2,440	-1.9%	(47)	2,393
Oregon	Portland	2,440	8.0%	196	2,636
Pennsylvania	Philadelphia	2,440	6.1%	150	2,590
Pennsylvania	Wilkes-Barre	2,440	-1.8%	(44)	2,396
Rhode Island	Providence	2,440	2.1%	51	2,491
South Carolina	Spartanburg	2,440	-5.7%	(140)	2,300
South Dakota	Rapid City	2,440	0.7%	17	2,457
Tennessee	Knoxville	2,440	-4.6%	(111)	2,329
Texas	Houston	2,440	-4.8%	(118)	2,322
Utah	Salt Lake City	2,440	3.7%	90	2,530
Vermont	Burlington	2,440	3.4%	83	2,523
Virginia	Alexandria	2,440	1.9%	46	2,486
Virginia	Lynchburg	2,440	-3.1%	(75)	2,365
Washington	Seattle	2,440	4.4%	107	2,547
Washington	Spokane	2,440	4.9%	120	2,560
West Virginia	Charleston	2,440	-0.1%	(3)	2,437
Wisconsin	Green Bay	2,440	-1.0%	(25)	2,415
Wyoming	Cheyenne	2,440	4.3%	105	2,545
Puerto Rico	Cayey	2,440	6.9%	167	2,607

21.5 O&M ESTIMATE

In addition to the general items discussed in the section of the report entitled O&M Estimate, the major areas for O&M for an Onshore Wind Facility include periodic gearbox, WTG, electric

generator, and associated electric conversion (e.g., GSU) technology repairs and replacement. These devices typically undergo major maintenance every five to seven years. Table 21-3 presents the O&M expenses for the WN Facility.

TABLE 21-3 – O&M EXPENSES FOR WN

Technology:	WN
Fixed O&M Expense	$28.07/kW-year
Variable O&M Expense	$0/MWh

21.6 ENVIRONMENTAL COMPLIANCE INFORMATION

Since wind utilizes a renewable fuel and no additional fuel is combusted to make power from an Onshore Wind Facility, air emissions are not created. Table 21-4 presents environmental emissions for the WN Facility.

TABLE 21-4 – ENVIRONMENTAL EMISSIONS FOR WN

Technology:	WN
NO_X	0 lb/MMBtu
SO_2	0 lb/MMBtu
CO_2	0 lb/MMBtu

22. OFFSHORE WIND (WF)

22.1 MECHANICAL EQUIPMENT AND SYSTEMS

The Offshore Wind ("WF") Facility is based on 80 offshore WTGs, each with a rated capacity of 5.0 MW. The total design capacity is 400 MW.

The turbines are each supported by a conical steel tower, which is widest at the base and tapers in diameter just below the nacelle. A foundation provides the tower with a firm anchor to the ground. The nacelle is attached to the top of the tower and contains the main mechanical components of the wind turbine, which include a variable-speed generator, transmission, and yaw drive. The rotor hub connects to the transmission through one end of the nacelle, and the rotor is then connected to the hub. The WTG has a three-bladed rotor with a diameter of approximately 125 meters. The WTG has an active yaw system in the nacelle to keep the rotor facing into the wind. The WF WTG is designed to withstand the conditions of the high seas, including additional redundancy of key components to enhance availability, corrosion protection and permanent monitoring.

Power is generated by the wind turbines, then converted using an onboard transformer to 34.5 kV AC. It is then delivered to a collection system at the base of each turbine. Power from all turbines is collected by the underground collection circuit.

The collection system supplies power to a new substation designed to step up the voltage to 115 kV for interconnection with the transmission system. Figure 22-1 presents a picture of a currently operating WF Facility.

FIGURE 22-1 – WF DESIGN CONFIGURATION

22.2 ELECTRICAL AND CONTROL SYSTEMS

The WF Facility has 80 wind turbine-driven electric generators. Each generator is a doubly-fed induction generator that feeds an AC/DC/AC power converter that provides an output of three-phase, 60 Hz electrical power. The power output available is approximately 5.5 MVA with an output voltage of 690 V stepped up to 34.5 kV using a transformer installed in the wind turbine pylon. The wind turbine transformers are interconnected on one or more underwater collector circuits trenched into the seabed that are connected to a collector bus (or several collector busses) through a circuit breaker for each circuit. The collector bus is connected to a high-voltage transmission system through the facility substation that includes a 34.5 kV switch or circuit breaker, GSU, high-voltage circuit breaker and a disconnect switch. If there are multiple collector busses this arrangement may be replicated for each bus. The GSU increases the voltage from the electric generator from 34.5 kV to interconnected transmission system high voltage.

The WF Facility is controlled using a SCADA system. The SCADA system provides centralized control of the facility by integrating the control systems provided with each of the wind turbines and the control of BOP systems and equipment.

22.3 OFF-SITE REQUIREMENTS

Similar to the WF Facility, the most significant off-site requirement for the WF Facility is the electrical interconnection to the utility transmission system, as discussed directly above.

22.4 CAPITAL COST ESTIMATE

The base Cost Estimate for the WF Facility with a nominal capacity of 400 MW is $5,975/kW. Table 22-1 summarizes the Cost Estimate categories for the WF Facility.

TABLE 22-1 – BASE PLANT SITE CAPITAL COST ESTIMATE FOR WF

Technology:	**WF**	
Nominal Capacity (ISO):	**400,000 kW**	
Nominal Heat Rate (ISO):	**N/A Btu/kWh-HHV**	
Capital Cost Category		**(000s) (October 1, 2010$)**
Civil Structural Material and Installation		**252,000**
Mechanical Equipment Supply and Installation		**835,328**
Electrical / I&C Supply and Installation		**148,302**
Project Indirects (1)		**463,856**
EPC Cost before Contingency and Fee		**1,699,486**
Fee and Contingency		**212,436**
Total Project EPC		**1,911,922**
Owner Costs (excluding project finance)		**477,981**
Total Project Cost (excluding finance)		**2,389,903**
Total Project EPC	**/ kW**	**4,780**
Owner Costs 25% (excluding project finance)	**/ kW**	**1,195**
Total Project Cost (excluding project finance)	**/ kW**	**5,975**

(1) Includes engineering, distributable costs, scaffolding, construction management, and start-up.

For this type of technology and power plant configuration, our regional adjustments took into consideration the following: seismic design differences, remote location issues, labor wage and productivity differences, location adjustments, owner cost differences, and the increase in overheads associated with these five location adjustments. The assumption was made that offshore wind projects would only be constructed offshore of the following states (where significant offshore wind resource is available): Alaska, California, Connecticut, Delaware, District of Columbia, Georgia, Hawaii, Illinois, Indiana, Maine, Maryland, Massachusetts, Michigan, Minnesota, New Jersey, New York, North Carolina, Oregon, Rhode Island, South Carolina, Texas, Virginia, Washington, Wisconsin and Puerto Rico.

Seismic design differences among the various locations were based on U.S. seismic map information that detailed the various seismic zones throughout the U.S. No cost increases were associated with seismic Zone 0 and cost step increases were considered for Zones 1, 2, 3 and 4.

Remote locations issues are related to geographic areas that typically require installation of man camps, higher craft incentives, and higher per diems for construction, because such areas are long distances from urban areas, where labor is generally abundant. Remote location designations were also considered in locations where higher equipment freight costs are typically incurred, which for example are regions not near established rail or highway access. Remote locations related to the Offshore Wind Facility include Fairbanks, Alaska; Honolulu, Hawaii; and Cayey, Puerto Rico.

Labor wage and productivity differences were handled as discussed in Section 2.5.1, taking into consideration the amount of labor we estimated for the WF Facility.

Location adjustments were made to locations where higher cost of living levels are incurred and/or where population density generally correlates to higher construction costs for power and other infrastructure projects. These locations include Alaska, California, Connecticut, Delaware, District of Columbia, Hawaii, Maine, Maryland, Massachusetts, New York, and Wisconsin.

Owner costs were reviewed based on the need for utility upgrades and/or infrastructure costs such as new facility transmission lines to tie to existing utility transmission substations or existing transmission lines.

Table 22-2 presents the WF Facility capital cost variations for alternative U.S. plant locations.

TABLE 22-2 – LOCATION-BASED COSTS FOR WF
(OCTOBER 1, 2010 DOLLARS)

State	City	Base Project Cost ($/kW)	Location Percent Variation	Delta Cost Difference ($/kW)	Total Location Project Cost ($/kW)
Alaska	Anchorage	5,975	15.9%	952	6,927
Alaska	Fairbanks	0	0.0%		
Alabama	Huntsville	0	0.0%		
Arizona	Phoenix	0	0.0%		
Arkansas	Little Rock	0	0.0%		
California	Los Angeles	5,975	7.7%	460	6,435
California	Redding	0	0.0%		
California	Bakersfield	0	0.0%		
California	Sacramento	0	0.0%		
California	San Francisco	5,975	16.6%	993	6,968
Colorado	Denver	0	0.0%		
Connecticut	Hartford	5,975	5.7%	342	6,317
Delaware	Dover	5,975	3.1%	184	6,159
District of Columbia	Washington	5,975	1.8%	110	6,085
Florida	Tallahassee	0	0.0%		
Florida	Tampa	0	0.0%		
Georgia	Atlanta	5,975	-7.0%	(418)	5,557
Hawaii	Honolulu	5,975	14.5%	864	6,839
Idaho	Boise	0	0.0%		
Illinois	Chicago	5,975	16.0%	958	6,933
Indiana	Indianapolis	5,975	-1.0%	(58)	5,917
Iowa	Davenport	0	0.0%		
Iowa	Waterloo	0	0.0%		
Kansas	Wichita	0	0.0%		
Kentucky	Louisville	0	0.0%		
Louisiana	New Orleans	0	0.0%		
Maine	Portland	5,975	-2.6%	(156)	5,819
Maryland	Baltimore	5,975	-2.1%	(126)	5,849
Massachusetts	Boston	5,975	13.2%	787	6,762
Michigan	Detroit	5,975	2.8%	165	6,140
Michigan	Grand Rapids	5,975	-6.7%	(403)	5,572
Minnesota	St. Paul	5,975	4.8%	288	6,263
Mississippi	Jackson	0	0.0%		
Missouri	St. Louis	0	0.0%		
Missouri	Kansas City	0	0.0%		
Montana	Great Falls	0	0.0%		
Nebraska	Omaha	0	0.0%		
New Hampshire	Concord	0	0.0%		
New Jersey	Newark	5,975	12.7%	761	6,736
New Mexico	Albuquerque	0	0.0%		

State	City	Base Project Cost ($/kW)	Location Percent Variation	Delta Cost Difference ($/kW)	Total Location Project Cost ($/kW)
New York	New York	5,975	29.4%	1,759	7,734
New York	Syracuse	5,975	-1.2%	(69)	5,906
Nevada	Las Vegas	0	0.0%		
North Carolina	Charlotte	5,975	-9.3%	(557)	5,418
North Dakota	Bismarck	0	0.0%		
Ohio	Cincinnati	0	0.0%		
Oregon	Portland	5,975	5.1%	302	6,277
Pennsylvania	Philadelphia	0	0.0%		
Pennsylvania	Wilkes-Barre	0	0.0%		
Rhode Island	Providence	5,975	2.5%	148	6,123
South Carolina	Spartanburg	5,975	-6.6%	(391)	5,584
South Dakota	Rapid City	0	0.0%		
Tennessee	Knoxville	0	0.0%		
Texas	Houston	5,975	-8.2%	(487)	5,488
Utah	Salt Lake City	0	0.0%		
Vermont	Burlington	0	0.0%		
Virginia	Alexandria	5,975	-2.7%	(161)	5,814
Virginia	Lynchburg	5,975	-5.7%	(340)	5,635
Washington	Seattle	5,975	4.8%	287	6,262
Washington	Spokane	0	0.0%		
West Virginia	Charleston	0	0.0%		
Wisconsin	Green Bay	5,975	-2.7%	(164)	5,811
Wyoming	Cheyenne	0	0.0%		
Puerto Rico	Cayey	5,975	-1.2%	(72)	5,903

22.5 O&M ESTIMATE

The types of maintenance performed on the WF Facility are materially similar to the WN Facility, discussed in Section 19.5; however, the expenses are higher because maintaining offshore parts is considerably more complicated, due to staging on ships and with helicopters. Table 22-3 presents the FOM and VOM expenses for the WF Facility.

TABLE 22-3 – O&M EXPENSES FOR WF

Technology:	WF
Fixed O&M Expense	$53.33/kW-year
Variable O&M Expense	$0/MWh

22.6 ENVIRONMENTAL COMPLIANCE INFORMATION

Since the WF Facility uses a renewable fuel and no additional fuel is combusted, there are no air emissions. Table 22-4 presents environmental emissions for the WF Facility.

TABLE 22-4 – ENVIRONMENTAL EMISSIONS FOR WF

Technology:	WF
NO_X	0 lb/MMBtu
SO_2	0 lb/MMBtu
CO_2	0 lb/MMBtu

23. SOLAR THERMAL - CENTRAL STATION (SO)

23.1 MECHANICAL EQUIPMENT AND SYSTEMS

The 100 MW Solar Thermal ("SO") Facility uses a solar concentrating thermal process based on direct steam, power towers, and heliostat mirror technology. The SO Facility incorporates a Rankine-cycle reheat ST which receives steam from a solar steam generator and a solar superheater and reheated steam from a solar reheater. The solar steam generator, solar superheater, and solar reheater are all installed at the top of a tower adjacent to a power block located at grade. The tower and power block are generally in the center of a heliostat solar field. The solar energy heats water in the steam generator, superheater and reheat boiler to make steam that runs the ST. The solar field and power generation equipment are started up each morning after sunrise and insolation (or light intensity) build-up, and are shut down in the evening when insolation drops below the level required for keeping the ST online.

A partial load natural gas-fired boiler is used for thermal input to the ST during the morning start-up cycle. The boiler is also generally operated during transient cloudy conditions, in order to keep the ST online and ready to resume production from solar thermal input, after the clouds clear. After the cloud passes and solar-to-thermal input resumes, the ST will be returned to full solar production and the gas-fired boiler is shut down. While permitting SO facilities with respect to water usage continues to be a challenge, our base assumption is that the SO Facility uses wet cooling technology.

The power block consists of one solar power tower and an ST with a reheat cycle, and it uses typical auxiliary components for heat rejection, water treatment, water disposal, and interconnection to the grid. Figure 23-1 presents a picture of a typical SO Facility.

FIGURE 23-1 – SO DESIGN CONFIGURATION

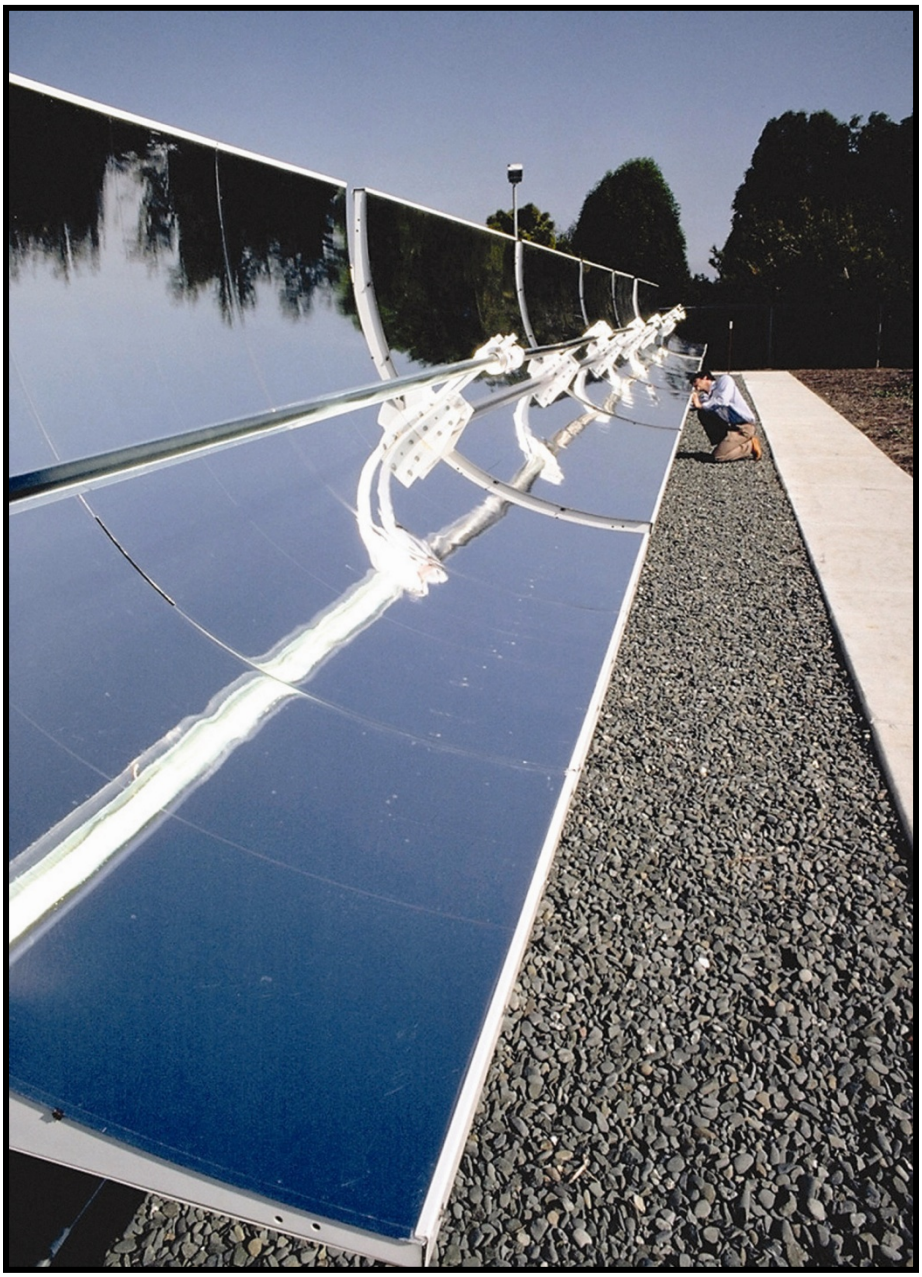

23.2 ELECTRICAL AND CONTROL SYSTEMS

The SO Facility has one ST electric generator. The generator is a 60 Hz machine rated at approximately 120 MVA with an output voltage of 13.8 kV. The ST electric generator is connected to a high-voltage bus in the facility switchyard via a dedicated generator circuit breaker, GSU, high-voltage circuit breaker and a disconnect switch. The GSU increases the voltage from the electric generator from 13.8 kV to interconnected transmission system high voltage.

The SO Facility is controlled using a DCS. The DCS provides centralized control of the facility by integrating the control systems provided with the solar steam generator/superheater/reheater system, ST and associated electric generator, and the control of BOP systems and equipment.

23.3 OFF-SITE REQUIREMENTS

Natural gas is delivered to the facility through a lateral connected to the local natural gas trunk line. Water for all processes at the SO Facility is obtained from a one of several available water sources (e.g., municipal water supply); however, due to the remote location of most solar thermal power plants, water is often sourced through on-site wells. The SO Facility uses a water treatment system and a high-efficiency reverse osmosis system to reduce the dissolved solids from the cooling water and to provide distilled water for HRSG make-up. Processed wastewater is sent to a municipal wastewater system, re-injected on-site, or an on-site ZLD system. Further, the electrical interconnection from the SO Facility on-site switchyard is effectuated by a connection to an adjacent utility substation.

23.4 CAPITAL COST ESTIMATE

The base Cost Estimate for the SO Facility with a nominal capacity of 100 MW is $4,692/kW. Table 23-1 summarizes the Cost Estimate categories for the SO Facility.

TABLE 23-1 – BASE PLANT SITE CAPITAL COST ESTIMATE FOR SO

Technology:	SO
Nominal Capacity (ISO):	100,000 kW
Nominal Heat Rate (ISO):	N/A Btu/kWh-HHV (2)

Capital Cost Category		(000s) (October 1, 2010$)
Civil Structural Material and Installation		48,475
Mechanical Equipment Supply and Installation		254,250
Electrical / I&C Supply and Installation		40,750
Project Indirects (1)		39,500
EPC Cost before Contingency and Fee		382,975
Fee and Contingency		25,000
Total Project EPC		407,975
Owner Costs (excluding project finance)		61,196
Total Project Cost (excluding finance)		469,171
Total Project EPC	/ kW	4,080
Owner Costs 15% (excluding project finance)	/ kW	612
Total Project Cost (excluding project finance)	/ kW	4,692

(1) Includes engineering, distributable costs, scaffolding, construction management, and start-up.
(2) Does not include natural gas firing, as such usage is sporadic and highly dependent on time of year and method of operation.

For this type of technology and power plant configuration, our regional adjustments took into consideration the following: seismic design differences, remote location issues, labor wage and productivity differences, location adjustments, owner cost differences, and the increase in overheads associated with the previous five location adjustments.

Seismic design differences among the various locations were based on U.S. seismic map information that detailed the various seismic zones throughout the U.S. No cost increases were associated with seismic Zone 0 and cost step increases were considered for Zones 1, 2, 3 and 4.

Remote location issues are related to geographic areas that typically require installation of man camps, higher craft incentives, and higher per diems are generally required with respect to construction, due to the fact that such areas are long distances from urban areas, where labor is generally abundant. Remote location designations were also considered in locations where higher equipment freight costs are typically incurred, which for example are regions not near

established rail or highway access. Remote locations related to the Solar Thermal Facility include Honolulu, Hawaii; Albuquerque, New Mexico; Cheyenne, Wyoming; and Cayey, Puerto Rico.

Labor wage and productivity differences were handled as discussed in Section 2.5.1, taking into consideration the amount of labor we estimated for the SO Facility.

Location adjustments were made to locations where higher cost of living levels are incurred and/or where population density generally correlates to higher construction costs for power and other infrastructure projects. These locations include Alaska, California, Connecticut, Delaware, District of Columbia, Hawaii, Illinois, Maine, Maryland, Massachusetts, Michigan, Minnesota, New York, Ohio, and Wisconsin.

Owner costs were reviewed based on the need for utility upgrades and/or infrastructure costs such as new facility transmission lines to tie to existing utility transmission substations or existing transmission lines.

Table 23-2 presents the SO Facility capital cost variations for alternative U.S. plant locations.

TABLE 23-2 – LOCATION-BASED COSTS FOR SO
(OCTOBER 1, 2010 DOLLARS)

State	City	Base Project Cost ($/kW)	Location Percent Variation	Delta Cost Difference ($/kW)	Total Location Project Cost ($/kW)
Alaska	Anchorage	4,700	23.8%	1,119	5,819
Alaska	Fairbanks	4,700	35.4%	1,662	6,362
Alabama	Huntsville	4,700	-11.3%	(532)	4,168
Arizona	Phoenix	4,700	-8.9%	(417)	4,283
Arkansas	Little Rock	4,700	-9.3%	(435)	4,265
California	Los Angeles	4,700	11.4%	538	5,238
California	Redding	4,700	6.3%	297	4,997
California	Bakersfield	4,700	6.7%	316	5,016
California	Sacramento	4,700	13.3%	623	5,323
California	San Francisco	4,700	26.8%	1,261	5,961
Colorado	Denver	4,700	-7.3%	(344)	4,356
Connecticut	Hartford	4,700	9.2%	431	5,131
Delaware	Dover	4,700	4.7%	220	4,920
District of Columbia	Washington	4,700	1.6%	74	4,774
Florida	Tallahassee	4,700	-15.5%	(727)	3,973
Florida	Tampa	4,700	-6.4%	(300)	4,400
Georgia	Atlanta	4,700	-12.3%	(578)	4,122
Hawaii	Honolulu	4,700	39.8%	1,871	6,571
Idaho	Boise	4,700	-4.8%	(225)	4,475
Illinois	Chicago	4,700	26.8%	1,262	5,962
Indiana	Indianapolis	4,700	-1.9%	(90)	4,610
Iowa	Davenport	4,700	0.4%	20	4,720
Iowa	Waterloo	4,700	-10.8%	(505)	4,195
Kansas	Wichita	4,700	-8.3%	(392)	4,308
Kentucky	Louisville	4,700	-9.4%	(440)	4,260
Louisiana	New Orleans	4,700	-15.9%	(748)	3,952
Maine	Portland	4,700	-5.9%	(278)	4,422
Maryland	Baltimore	4,700	-4.4%	(209)	4,491
Massachusetts	Boston	4,700	22.2%	1,043	5,743
Michigan	Detroit	4,700	4.8%	224	4,924
Michigan	Grand Rapids	4,700	-11.8%	(554)	4,146
Minnesota	St. Paul	4,700	7.2%	340	5,040
Mississippi	Jackson	4,700	-11.2%	(528)	4,172
Missouri	St. Louis	4,700	5.7%	270	4,970
Missouri	Kansas City	4,700	3.1%	144	4,844
Montana	Great Falls	4,700	-5.3%	(248)	4,452
Nebraska	Omaha	4,700	-3.5%	(165)	4,535
New Hampshire	Concord	4,700	-1.7%	(80)	4,620
New Jersey	Newark	4,700	22.2%	1,042	5,742
New Mexico	Albuquerque	4,700	-4.6%	(217)	4,483

State	City	Base Project Cost ($/kW)	Location Percent Variation	Delta Cost Difference ($/kW)	Total Location Project Cost ($/kW)
New York	New York	4,700	50.1%	2,355	7,055
New York	Syracuse	4,700	-2.4%	(114)	4,586
Nevada	Las Vegas	4,700	11.5%	542	5,242
North Carolina	Charlotte	4,700	-16.4%	(772)	3,928
North Dakota	Bismarck	4,700	-8.8%	(412)	4,288
Ohio	Cincinnati	4,700	-6.6%	(310)	4,390
Oregon	Portland	4,700	5.9%	277	4,977
Pennsylvania	Philadelphia	4,700	16.1%	758	5,458
Pennsylvania	Wilkes-Barre	4,700	-7.3%	(341)	4,359
Rhode Island	Providence	4,700	4.2%	196	4,896
South Carolina	Spartanburg	4,700	-18.8%	(882)	3,818
South Dakota	Rapid City	4,700	-12.8%	(604)	4,096
Tennessee	Knoxville	4,700	-14.4%	(677)	4,023
Texas	Houston	4,700	-14.2%	(670)	4,030
Utah	Salt Lake City	4,700	-6.9%	(325)	4,375
Vermont	Burlington	4,700	-7.2%	(338)	4,362
Virginia	Alexandria	4,700	-4.8%	(225)	4,475
Virginia	Lynchburg	4,700	-10.0%	(471)	4,229
Washington	Seattle	4,700	8.0%	377	5,077
Washington	Spokane	4,700	-2.7%	(127)	4,573
West Virginia	Charleston	4,700	-3.3%	(155)	4,545
Wisconsin	Green Bay	4,700	-4.9%	(232)	4,468
Wyoming	Cheyenne	4,700	-7.0%	(329)	4,371
Puerto Rico	Cayey	4,700	-4.0%	(190)	4,510

23.5 O&M ESTIMATE

The typical O&M expenses for the SO Facility include mirror cleaning, repair, and replacement; thermal tube replacements; and BOP major maintenance. The BOP major maintenance is similar to that which is performed on a combined-cycle plant: HRSG, ST, and electric generator major maintenance, typically performed approximately every seven years. Additionally, most thermal solar operators do not treat O&M on a variable basis, and consequently, all O&M expenses are shown below on a fixed basis. Table 23-3 presents the O&M expenses for the SO Facility.

TABLE 23-3 – O&M EXPENSES FOR SO

Technology:	SO
Fixed O&M Expense	$64.00/kW-year
Variable O&M Expense	$0/MWh

23.6 ENVIRONMENTAL COMPLIANCE INFORMATION

Table 23-4 presents environmental emissions for the SO Facility.

TABLE 23-4 – ENVIRONMENTAL EMISSIONS FOR SO

Technology:	SO
NO_X	0 lb/MMBtu
SO_2	0 lb/MMBtu
CO_2	0 lb/MMBtu

24. PHOTOVOLTAIC (CENTRAL STATION) FACILITY (PV)

24.1 MECHANICAL EQUIPMENT AND SYSTEMS

The following describes a nominally 7 MW-AC Photovoltaic ("PV") Facility. An analysis is also provided for a nominally 150 MW-AC PV Facility, which is essentially a significant expansion of the 7 MW Facility; however, a detailed technical description (due to the similarities with the 7 MW Facility and the technology associated therewith) is not provided herein. The PV Facility uses numerous arrays of ground-mounted, fixed-tilt PV modules which directly convert incident solar radiation into DC electricity, which can then be inverted to AC. Additional BOP components include metal racks and foundations to support fixed panels and keep them aligned at the correct angle, DC wiring, combiner boxes where individual strings of panels are connected prior to being fed into the inverters, DC-to-AC inverters, AC wiring, various switchgear and step-up transformers, and a control system (partly incorporated into the inverter control electronics) to monitor plant output and adjust the balance of voltage and current to yield maximum power. Figure 22-1 presents a picture of a typical PV Facility.

FIGURE 24-1 – PV DESIGN CONFIGURATION

24.2 ELECTRICAL AND CONTROL SYSTEMS

The 7 MW-AC PV Facility is comprised of 14 half-megawatt building blocks, each block consisting of groups of PV modules connected to a 500 kW-AC inverter. While the ratio of DC module capacity to AC inverter capacity varies, for this analysis we have assumed a ratio of

1.2:1, or 600 kW-DC of modules per 500 kW-AC inverter. Such a ratio is typical of current systems, though higher ratios are becoming more common. Groups of PV modules produce DC electricity and are connected in series to form "strings" which are then connected in parallel in a combiner box which contains a fuse for each string. The cables are routed from the modules to combiner boxes and a number of combiner boxes are connected to the input of a 500 kW-AC inverter, which converts the aggregate power from DC to three-phase AC electricity at an output voltage of typically 265 V. The output voltage of an inverter (or sometimes several inverters connected together) is stepped up to a higher voltage level, typically in the range of 13.8 kV (or 34.5 kV for larger systems) through a GSU connected to the inverter output terminals. Two inverters are often combined on each of transformer, each of which is rated 1 MVA. The transformers are connected in groups to form circuits on an underground collection system. The circuits are connected to a 13.8 kV circuit breaker and then to the local utility distribution grid.

Each inverter has its own integral control system. The aggregate of all the inverters and associated DC arrays are monitored through a SCADA system, sometimes provided by the inverter manufacturer.

24.3 OFF-SITE REQUIREMENTS

Unlike other power technologies discussed in this report, the essential off-site requirements for which provisions must be made on a PV Facility are water supply (generally in limited quantities) and an electrical interconnection between the PV Facility switchyard and the local utility distribution system.

24.4 CAPITAL COST ESTIMATE

The base Cost Estimate for the PV Facility with a nominal capacity of 7 MW-AC is 6,050/kW and with a nominal capacity of 150 MW is $4,755/kW. Table 24-1 and Table 24-2 summarize the Cost Estimate categories for the PV Facility.

TABLE 24-1 – BASE PLANT SITE CAPITAL COST ESTIMATE FOR PV

Technology:	**PV**	
Nominal Capacity (ISO):	**7,000 kW**	
Nominal Heat Rate (ISO):	**N/A Btu/kWh-HHV**	
Capital Cost Category		**(000s) (October 1, 2010$)**
Civil Structural Material and Installation		**6,100**
Mechanical Equipment Supply and Installation		**20,500**
Electrical / I&C Supply and Installation		**3,550**
Project Indirects (1)		**3,665**
EPC Cost before Contingency and Fee		**33,815**
Fee and Contingency		**4,000**
Total Project EPC		**37,815**
Owner Costs (excluding project finance)		**4,538**
Total Project Cost (excluding finance)		**42,353**
Total Project EPC	**/ kW**	**5,402**
Owner Costs 12% (excluding project finance)	**/ kW**	**648**
Total Project Cost (excluding project finance)	**/ kW**	**6,050**

(1) Includes engineering, distributable costs, scaffolding, construction management, and start-up.

TABLE 24-2 – BASE PLANT SITE CAPITAL COST ESTIMATE FOR PV

Technology:	**PV**	
Nominal Capacity (ISO):	**150,000 kW**	
Nominal Heat Rate (ISO):	**N/A Btu/kWh-HHV**	
Capital Cost Category		**(000s) (October 1, 2010$)**
Civil Structural Material and Installation		**65,000**
Mechanical Equipment Supply and Installation		**391,583**
Electrical / I&C Supply and Installation		**64,350**
Project Indirects (1)		**52,762**
EPC Cost before Contingency and Fee		**573,695**
Fee and Contingency		**68,843**
Total Project EPC		**642,538**
Owner Costs (excluding project finance)		**70,679**
Total Project Cost (excluding finance)		**713,217**
Total Project EPC	**/ kW**	**4,283**
Owner Costs 12% (excluding project finance)	**/ kW**	**471**
Total Project Cost (excluding project finance)	**/ kW**	**4,755**

(1) Includes engineering, distributable costs, scaffolding, construction management, and start-up.

For this type of technology and power plant configuration, our regional adjustments took into consideration the following: seismic design differences, remote location issues, labor wage and productivity differences, location adjustments, owner cost differences, and the increase in overheads associated with these five location adjustments.

Seismic design differences among the various locations were based on U.S. seismic map information that detailed the various seismic zones throughout the U.S. No cost increases were associated with seismic Zone 0 and cost step increases were considered for Zones 1, 2, 3 and 4.

Remote location issues are related to geographic areas that typically require installation of man camps, higher craft incentives, and higher per diems are generally required with respect to construction, due to the fact that such areas are long distances from urban areas, where labor is generally abundant. Remote location designations were also considered in locations where higher equipment freight costs are typically incurred, which for example are regions not near established rail or highway access. Remote locations related to the Photovoltaic Facility include

Fairbanks, Alaska; Honolulu, Hawaii; Albuquerque, New Mexico Cheyenne, Wyoming; and Cayey, Puerto Rico.

Labor wage and productivity differences were handled as discussed in Section 2.5.1, taking into consideration the amount of labor we estimated for the PV Facility.

Location adjustments were made to locations where higher cost of living levels are incurred and/or where population density generally correlates to higher construction costs for power and other infrastructure projects. These locations include Alaska, California, Connecticut, Delaware, District of Columbia, Hawaii, Illinois, Maine, Maryland, Massachusetts, Michigan, Minnesota, New York, Ohio, and Wisconsin.

Owner costs were reviewed based on the need for utility upgrades and/or infrastructure costs such as new facility transmission lines to tie to existing utility transmission substations or existing transmission lines.

Table 24-3 and Table 24-4 present the PV Facility capital cost variations for alternative U.S. plant locations.

TABLE 24-3 – LOCATION-BASED COSTS FOR PV (7 MW)
(OCTOBER 1, 2010 DOLLARS)

State	City	Base Project Cost ($/kW)	Location Percent Variation	Delta Cost Difference ($/kW)	Total Location Project Cost ($/kW)
Alaska	Anchorage	6,050	16.8%	1,016	7,066
Alaska	Fairbanks	6,050	25.6%	1,548	7,598
Alabama	Huntsville	6,050	-7.3%	(441)	5,609
Arizona	Phoenix	6,050	-5.7%	(344)	5,706
Arkansas	Little Rock	6,050	-5.9%	(359)	5,691
California	Los Angeles	6,050	8.1%	490	6,540
California	Redding	6,050	4.6%	277	6,327
California	Bakersfield	6,050	5.0%	301	6,351
California	Sacramento	6,050	9.1%	549	6,599
California	San Francisco	6,050	18.1%	1,096	7,146
Colorado	Denver	6,050	-4.3%	(263)	5,787
Connecticut	Hartford	6,050	6.2%	376	6,426
Delaware	Dover	6,050	3.3%	198	6,248
District of Columbia	Washington	6,050	1.6%	96	6,146
Florida	Tallahassee	6,050	-10.0%	(605)	5,445
Florida	Tampa	6,050	-4.1%	(250)	5,800
Georgia	Atlanta	6,050	-7.9%	(480)	5,570
Hawaii	Honolulu	6,050	29.9%	1,812	7,862
Idaho	Boise	6,050	-2.7%	(162)	5,888
Illinois	Chicago	6,050	17.8%	1,075	7,125
Indiana	Indianapolis	6,050	-1.2%	(70)	5,980
Iowa	Davenport	6,050	0.6%	38	6,088
Iowa	Waterloo	6,050	-6.6%	(399)	5,651
Kansas	Wichita	6,050	-5.0%	(303)	5,747
Kentucky	Louisville	6,050	-6.0%	(364)	5,686
Louisiana	New Orleans	6,050	-10.3%	(622)	5,428
Maine	Portland	6,050	-3.4%	(203)	5,847
Maryland	Baltimore	6,050	-2.6%	(158)	5,892
Massachusetts	Boston	6,050	14.6%	885	6,935
Michigan	Detroit	6,050	3.1%	188	6,238
Michigan	Grand Rapids	6,050	-7.6%	(461)	5,589
Minnesota	St. Paul	6,050	5.1%	308	6,358
Mississippi	Jackson	6,050	-7.2%	(438)	5,612
Missouri	St. Louis	6,050	3.9%	233	6,283
Missouri	Kansas City	6,050	2.0%	123	6,173
Montana	Great Falls	6,050	-2.9%	(178)	5,872
Nebraska	Omaha	6,050	-1.9%	(114)	5,936
New Hampshire	Concord	6,050	-0.7%	(42)	6,008
New Jersey	Newark	6,050	14.4%	869	6,919
New Mexico	Albuquerque	6,050	-2.5%	(154)	5,896

State	City	Base Project Cost ($/kW)	Location Percent Variation	Delta Cost Difference ($/kW)	Total Location Project Cost ($/kW)
New York	New York	6,050	32.9%	1,988	8,038
New York	Syracuse	6,050	-1.4%	(86)	5,964
Nevada	Las Vegas	6,050	7.9%	476	6,526
North Carolina	Charlotte	6,050	-10.6%	(640)	5,410
North Dakota	Bismarck	6,050	-5.3%	(318)	5,732
Ohio	Cincinnati	6,050	-4.2%	(256)	5,794
Oregon	Portland	6,050	4.3%	260	6,310
Pennsylvania	Philadelphia	6,050	10.5%	634	6,684
Pennsylvania	Wilkes-Barre	6,050	-4.6%	(281)	5,769
Rhode Island	Providence	6,050	2.7%	166	6,216
South Carolina	Spartanburg	6,050	-12.1%	(731)	5,319
South Dakota	Rapid City	6,050	-7.9%	(477)	5,573
Tennessee	Knoxville	6,050	-9.3%	(562)	5,488
Texas	Houston	6,050	-9.2%	(557)	5,493
Utah	Salt Lake City	6,050	-4.0%	(240)	5,810
Vermont	Burlington	6,050	-4.2%	(256)	5,794
Virginia	Alexandria	6,050	-3.1%	(185)	5,865
Virginia	Lynchburg	6,050	-6.5%	(391)	5,659
Washington	Seattle	6,050	5.3%	322	6,372
Washington	Spokane	6,050	-1.3%	(81)	5,969
West Virginia	Charleston	6,050	-2.0%	(124)	5,926
Wisconsin	Green Bay	6,050	-3.1%	(190)	5,860
Wyoming	Cheyenne	6,050	-4.0%	(240)	5,810
Puerto Rico	Cayey	6,050	-1.9%	(117)	5,933

TABLE 24-4 – LOCATION-BASED COSTS FOR PV (150 MW)
(OCTOBER 1, 2010 DOLLARS)

State	City	Base Project Cost ($/kW)	Location Percent Variation	Delta Cost Difference ($/kW)	Total Location Project Cost ($/kW)
Alaska	Anchorage	4,755	19.9%	947	5,702
Alaska	Fairbanks	4,755	30.9%	1,470	6,225
Alabama	Huntsville	4,755	-8.0%	(379)	4,376
Arizona	Phoenix	4,755	-6.2%	(294)	4,461
Arkansas	Little Rock	4,755	-6.5%	(307)	4,448
California	Los Angeles	4,755	9.6%	458	5,213
California	Redding	4,755	5.5%	263	5,018
California	Bakersfield	4,755	6.1%	291	5,046
California	Sacramento	4,755	10.5%	498	5,253
California	San Francisco	4,755	20.7%	985	5,740
Colorado	Denver	4,755	-4.4%	(208)	4,547
Connecticut	Hartford	4,755	7.1%	339	5,094
Delaware	Dover	4,755	3.8%	183	4,938
District of Columbia	Washington	4,755	2.3%	111	4,866
Florida	Tallahassee	4,755	-11.0%	(522)	4,233
Florida	Tampa	4,755	-4.5%	(216)	4,539
Georgia	Atlanta	4,755	-8.7%	(413)	4,342
Hawaii	Honolulu	4,755	37.2%	1,771	6,526
Idaho	Boise	4,755	-2.5%	(119)	4,636
Illinois	Chicago	4,755	19.9%	949	5,704
Indiana	Indianapolis	4,755	-1.2%	(57)	4,698
Iowa	Davenport	4,755	1.1%	51	4,806
Iowa	Waterloo	4,755	-6.9%	(327)	4,428
Kansas	Wichita	4,755	-5.1%	(242)	4,513
Kentucky	Louisville	4,755	-6.6%	(313)	4,442
Louisiana	New Orleans	4,755	-11.3%	(537)	4,218
Maine	Portland	4,755	-3.2%	(152)	4,603
Maryland	Baltimore	4,755	-2.6%	(124)	4,631
Massachusetts	Boston	4,755	16.4%	778	5,533
Michigan	Detroit	4,755	3.4%	163	4,918
Michigan	Grand Rapids	4,755	-8.4%	(398)	4,357
Minnesota	St. Paul	4,755	6.0%	286	5,041
Mississippi	Jackson	4,755	-7.9%	(377)	4,378
Missouri	St. Louis	4,755	4.4%	208	4,963
Missouri	Kansas City	4,755	2.3%	109	4,864
Montana	Great Falls	4,755	-2.7%	(130)	4,625
Nebraska	Omaha	4,755	-1.7%	(79)	4,676
New Hampshire	Concord	4,755	-0.3%	(15)	4,740
New Jersey	Newark	4,755	15.8%	751	5,506
New Mexico	Albuquerque	4,755	-2.3%	(111)	4,644

State	City	Base Project Cost ($/kW)	Location Percent Variation	Delta Cost Difference ($/kW)	Total Location Project Cost ($/kW)
New York	New York	4,755	36.6%	1,739	6,494
New York	Syracuse	4,755	-1.4%	(68)	4,687
Nevada	Las Vegas	4,755	9.1%	432	5,187
North Carolina	Charlotte	4,755	-11.6%	(549)	4,206
North Dakota	Bismarck	4,755	-5.3%	(254)	4,501
Ohio	Cincinnati	4,755	-4.6%	(220)	4,535
Oregon	Portland	4,755	5.2%	249	5,004
Pennsylvania	Philadelphia	4,755	11.6%	550	5,305
Pennsylvania	Wilkes-Barre	4,755	-5.0%	(240)	4,515
Rhode Island	Providence	4,755	3.1%	146	4,901
South Carolina	Spartanburg	4,755	-13.2%	(628)	4,127
South Dakota	Rapid City	4,755	-8.2%	(392)	4,363
Tennessee	Knoxville	4,755	-10.2%	(483)	4,272
Texas	Houston	4,755	-10.1%	(481)	4,274
Utah	Salt Lake City	4,755	-3.8%	(183)	4,572
Vermont	Burlington	4,755	-4.2%	(201)	4,554
Virginia	Alexandria	4,755	-3.3%	(159)	4,596
Virginia	Lynchburg	4,755	-7.1%	(336)	4,419
Washington	Seattle	4,755	6.0%	284	5,039
Washington	Spokane	4,755	-1.0%	(49)	4,706
West Virginia	Charleston	4,755	-2.2%	(103)	4,652
Wisconsin	Green Bay	4,755	-3.4%	(161)	4,594
Wyoming	Cheyenne	4,755	-3.8%	(180)	4,575
Puerto Rico	Cayey	4,755	-1.4%	(68)	4,687

24.5 O&M ESTIMATE

The significant O&M items for a PV Facility include periodic inverter maintenance and periodic panel water washing. Additionally, most PV solar operators do not treat O&M on a variable basis, and consequently, all O&M expenses are shown below on a fixed basis. Table 24-5 and Table 24-6 present the O&M expenses for the PV Facility.

TABLE 24-5 – O&M EXPENSES FOR PV FACILITY (7 MW)

Technology:	PV
Fixed O&M Expense	$26.40/kW-year
Variable O&M Expense	$0/MWh

TABLE 24-6 – O&M EXPENSES FOR PV FACILITY (150 MW)

Technology:	PV
Fixed O&M Expense	$16.70/kW-year
Variable O&M Expense	$0/MWh

24.6 ENVIRONMENTAL COMPLIANCE INFORMATION

Table 24-7 presents environmental emissions for the PV Facility.

TABLE 24-7 – ENVIRONMENTAL EMISSIONS FOR PV

Technology:	Photovoltaic
NO_X	0 lb/MMBtu
SO_2	0 lb/MMBtu
CO_2	0 lb/MMBtu